UNITED STATES ENVIRONMENTAL PROTECTION AGENCY
REGION 4
SAM NUNN
ATLANTA FEDERAL CENTER
61 FORSYTH STREET
ATLANTA GEORGIA 30303-8960

RECEIVED
2010 SEP 30 PM 1:11
OFFICE OF THE CITY CLERK

SEP 27 2010

RECEIVED
SEP 29 2010
PUBLIC WORKS

CERTIFIED MAIL 70090960000064890671
RETURN RECEIPT REQUESTED

The Honorable Tom Beehan
Mayor, City of Oak Ridge
200 South Tulane Avenue
Post Office Box 1
Oak Ridge, Tennessee 37830

Re: Administrative Order No. CWA-04-2010-4772
City of Oak Ridge, Turtle Creek
Wastewater Treatment Plant and Associated Wastewater
Collection and Transmission System
NPDES Permit No. TN0024155

Dear Mayor Beehan:

Pursuant to Section 309(a) of the Clean Water Act (CWA), 33 U.S.C. § 1319(a), as amended, the Director, Water Protection Division, United States Environmental Protection Agency (EPA), Region 4 has determined that the above named facility is in violation of Section 301 of the CWA, 33 U.S.C. § 1311. As a result, the Director has issued the enclosed Administrative Order (AO) pursuant to Sections 308 and 309(a) of the CWA, 33 U.S.C. §§ 1318 and 1319(a).

This AO does not replace, modify or eliminate any other requirement of the CWA or the National Pollution Elimination System (NPDES) permit. Notwithstanding the issuance of this AO, EPA retains the right to bring further enforcement action under Sections 309(b) or 309(g) of the CWA, 33 U.S.C. §§ 1319(d) or 1319(g), for the violations cited therein or for any other violation of the CWA. Violations of the CWA, including requirements contained in a NPDES permit or an AO issued under Section 309(a) of the CWA, remain subject to a civil penalty of up to $37,500 per day for each violation, pursuant to Sections 309(d) and 309(g) of the CWA, 33 U.S.C. §§ 1319(d) and 1319(g), as amended be the *Civil Monetary Penalty Inflation Adjustment Rule,* 73 Fed. Reg. 75340 (December 11, 2008). Such violations may also be subject to criminal penalties pursuant to Section 309(c) of the CWA, 33 U.S.C. § 1319(c).

Should you have any questions concerning the requirements contained in the enclosed AO, please contact either Mr. César Zapata, Chief of the West NPDES Enforcement Section at (404) 562-9744, or Mr. Dennis Sayre (404) 562-9756 or you may submit written comments to the address on this letterhead. Legal inquiries should be directed to Ms. Judy Marshall, Associate Regional Counsel, at (404) 562-9533.

Sincerely,

Denisse D. Diaz, Acting Chief
Clean Water Enforcement Branch
Water Protection Division

Enclosure

cc: Paul Davis
Division Water Pollution Control, TDEC

UNITED STATES ENVIRONMENTAL PROTECTION AGENCY
REGION 4

IN THE MATTER OF:	) **ADMINISTRATIVE ORDER**
	)
THE CITY OF OAK RIDGE, TENNESSEE	)
	) **DOCKET NO. CWA-04-2010-4772**
	)

ADMINISTRATIVE ORDER

I. Statutory Authority

1. Section 309(a) of the Clean Water Act (CWA), 33 U.S.C. § 1319(a), provides that whenever the U.S. Environmental Protection Agency (EPA) finds that any person is in violation of any condition or limitation which implements, *inter alia*, Sections 301(a) and 402 of the CWA, 33 U.S.C. §§ 1311(a) and 1342, EPA may issue an order requiring such person to comply with such condition or limitation, and shall specify a time for compliance that EPA determines to be reasonable.

2. The following Findings are made and Order issued pursuant to the authority vested in EPA by Section 308(a) and 309(a) of the CWA, 33 U.S.C. § 1318(a) and 1319(a), as amended. This authority has been delegated to the Regional Administrator of EPA, Region 4, and further delegated by the Regional Administrator to the Director of the Water Protection Division, EPA, Region 4.

II. Findings

3. The City of Oak Ridge (City) is a municipality existing under the laws of the State of Tennessee and is a "person" within the meaning of Section 502(5) of the CWA, 33 U.S.C.§ 1362(5).

4. At all times relevant to this action, the City owned and operated a Wastewater Collection and Transmission System (WCTS), as defined in Paragraph 15 below, that connects to the Oak Ridge Sewage Treatment Plant located at 200 Monterey Road, Oak Ridge, Tennessee, which is named the Turtle Creek Wastewater Treatment Plant (WWTP). The WWTP, and its associated WCTS, is a Publicly Owned Treatment Works (POTW) as defined at 40 C.F.R. § 403.3, and discharges "pollutants" as defined at Section 502(6) of the CWA, 33 U.S.C. § 1362(6), from a "point source" as defined at Section 502(14) of the CWA, 33 U.S.C. § 1362(14), into the East Fork Poplar Creek, a "navigable water" as defined at Section 502(7) of the CWA, 33 U.S.C. § 1362(7).

5. To accomplish the objective of the CWA, defined in Section 101(a) of the CWA, 33 U.S.C. § 1251(a), to restore and maintain the chemical, physical, and biological integrity of

the nation's waters, Section 301(a) of the CWA, 33 U.S.C. § 1311(a), prohibits the discharge of pollutants by any person into waters of the United States except as in compliance with a National Pollutant Discharge Elimination System (NPDES) permit issued pursuant to Section 402 of the CWA, 33 U.S.C. § 1342.

6. Section 402 of the CWA, 33 U.S.C. § 1342, establishes an NPDES permit program authorizing EPA or authorized states to administer the NPDES permit program, including the issuance of NPDES permits allowing for the discharge of pollutants into navigable waters subject to specific terms and conditions. EPA has granted the State of Tennessee, through the Tennessee Department of Environment and Conservation (TDEC), approval to issue NPDES permits pursuant to Section 402(b) of the CWA.

7. TDEC issued NPDES Permit No. TN0024155 (Permit) to the WWTP and its associated WCTS for the discharge of treated domestic and industrial sanitary wastewaters into navigable waters subject to specific terms and conditions. The Permit became effective on October 1, 2008, and expires on August 31, 2013.

8. The Permit requires compliance with the effluent limits as specifically set forth in the Permit. To demonstrate compliance, the City monitors discharges from the WWTP and its associated WCTS, and submits monthly Discharge Monitoring Reports (DMRs) to TDEC with results of the monitoring.

9. Section 2.1.4 of the Permit requires the City to properly operate and maintain all facilities and systems (and related appurtenances) for collection and treatment.

10. Section 2.3.3 of the Permit defines an overflow as any release of sewage from any portion of the collection, transmission or treatment system other than through permitted outfalls; states that the City shall operate the collection system so as to avoid overflows, and states that overflows are prohibited.

11. On November 20, 2008, EPA sent an Information Request Letter, pursuant to Section 308 of the CWA, 33 U.S.C. § 1318, to the City requesting information related to Sanitary Sewer Overflows (SSOs), as defined in Paragraph 15 below, from the WCTS, to evaluate the performance of the WWTP and its associated WCTS, and to assess the City's compliance with the Permit and the CWA.

12. On October 27 and 28, 2009, EPA conducted a Compliance Evaluation Inspection (CEI) of the WWTP and its associated WCTS to further evaluate the City's compliance with the Permit and the CWA.

13. Based on its review, EPA finds that the City constructed, and maintained as operational, nine unpermitted outfalls (constructed overflows). EPA also finds that the City failed to adequately report all known SSOs to TDEC in accordance with the Permit, and failed to report all known SSOs to EPA in response to the Information Request Letter. EPA further finds

that the City failed to properly operate the WWTP and its associated WCTS in accordance with the Permit, and that the City discharged wastewater without a permit through nine outfalls.

III. Violations

14. The City has violated Section 301(a) of the CWA, 33 U.S.C. § 1311(a), and the Permit, by failing to comply with the operation, maintenance and reporting requirements of its Permit, and by discharging pollutants without a permit as required by Section 402 of the CWA, 33 U.S.C. § 1342.

IV. Order

15. For purposes of this Order, the following definitions shall apply:

A. "Building backup" shall mean a wastewater backup into a building that is caused by blockages, malfunctions, or flow conditions in the Sewer System. A wastewater backup into a building that is caused by a blockage or other malfunction of a Private Lateral is not a Building Backup.

B. "Bypass" shall have the meaning set forth at 40 C.F.R. § 122.41(m).

C. "Excessive Infiltration and Inflow" (Excessive I/I) shall mean the quantities of infiltration/inflow which can be economically eliminated from a sewer system as determined in a cost-effectiveness analysis that compares the costs for correcting the infiltration/inflow conditions to the total costs for transportation and treatment of the infiltration/inflow.

D. "Private lateral" shall mean that portion of a sanitary sewer conveyance pipe, including that portion in the public right of way, that extends from the wastewater main to the single-family, multi-family, apartment or other dwelling unit or commercial or industrial structure to which wastewater service is or has been provided.

E. "Sanitary Sewer Overflow" or "SSO" shall mean an overflow, spill or release of wastewater from a Sewer System including unpermitted discharges; overflows, spills, or releases of wastewater that may, or may not have reached waters of the United States or the State; and all building backups.

F. "Sewer System" shall mean the WWTP and its associated WCTS.

G. "Significant Industrial Users" means an industrial user subject to Categorical Pretreatment Standards under 40 C.F.R. 403.6 and 40 C.F.R. Chapter I Ssubchapter N; any industry which discharges an average of 25,000 gallons per day or more of process wastewater to the sewer system (excluding sanitary, contact cooling and boiler blowdown wastewater); or any industry which is designated as such on the basis that the industrial user has a reasonable potential for adversely affecting the operation of the collection system or treatment plant, or

violating any pretreatment requirement.

H. "Unpermitted discharge" shall mean a discharge of pollutants which reaches waters of the United States or the State from the Sewer System (including constructed overflows), from WWTPs through a point source not specified in an NPDES Permit, or from WWTPs which constitutes a prohibited Bypass.

I. "Wastewater Collection and Transmission Systems" or "WCTS" shall mean the municipal wastewater collection and transmission systems, including all pipes, force mains, gravity sewer lines, lift stations, pump stations, manholes and appurtenances thereto, which are owned or operated by the City.

J. "Wastewater Treatment Plant" or "WWTP" shall mean devices or systems used in the storage, treatment, recycling, and reclamation of municipal wastewater. For purposes of this Order, this definition shall include all facilities owned, managed, operated, and maintained by the City, including but not limited to the Turtle Creek WWTP.

16. Based on the foregoing Findings and pursuant to the authority of Sections 308 and 309(a) of the CWA, 33 U.S.C. §§ 1318 and 1319(a), IT IS HEREBY ORDERED that the City comply with the following requirements:

A. Sanitary Sewer Overflows

Within two (2) months of the effective date of this Order, the City shall identify and provide to EPA a list of SSOs (including from constructed overflows) for the past twenty-four (24) months prior to the effective date of this Order. For each SSO provide the following, if available: location of the SSO, including source (pump station, manhole, etc.); date and time of the SSO; date and time when the City was notified of the SSO event; date and time when the City (or any contractor) responded to the SSO; date and time when the SSO ceased; corrective actions taken to stop the SSO; date and time when corrective action was completed; ultimate destination of the SSO, such as surface waterbody (by name), storm drain leading to surface waterbody (by name), dry land, building, etc.; volume of the SSO; and cause of the SSO such as grease, roots, other blockages, wet weather (infiltration and inflow), loss of power at pump station, pump failure, etc.

B. System Evaluation and Rehabilitation Plans (SERP)

The City shall develop a System Evaluation and Rehabilitation Plan (SERP) to evaluate and rehabilitate the City's WCTS, and to identify deficiencies within the WCTS that contribute to SSOs and excessive I/I, as defined in Paragraph 15 above. The SERP shall include a plan of action to correct those deficiencies. The SERP will consist of a Capacity Assessment Plan, a Sewer System Evaluation Survey (SSES) and a Collection System Remediation Plan. In developing the SERP, the City shall refer to published guidance documents, including but not limited to, *Sewer System Infrastructure Analysis and Rehabilitation* handbook, EPA/625/6-

91/030, October 1991; *Computer Tools for Sanitary Sewer System Capacity Analysis and Planning*, EPA/600/R-07/111, October 2007; *Existing Sewer Evaluation and Rehabilitation*, WEF MOP FD-6, 1994; the National Association of Sewer Service Companies (NASSCO) *Manual of Practice*; the State of Tennessee's *Tennessee Design Criteria for Sewage Works*, April 1989, and *A Guide to Short Term Flow Surveys of Sewer Systems*, WRC Engineering (Undated).

i. Capacity Assessment Plan

a. Within six (6) months of the effective date of this Order, the City shall submit a Capacity Assessment Plan for EPA's review, comment and approval that will describe how the City will undertake a Capacity Assessment that shall include an engineering study to comprehensively evaluate the design hydraulic capacity and actual dry weather and wet weather flow conditions of the WCTS. The Capacity Assessment Plan shall provide details on the methodology to be used (e.g., Manning/Chezy) and whether that methodology will be carried out using manual computations or computerized modeling. If computerized modeling is to be used for some or all of these analyses, a description of the software package(s) to be used shall be included in the Capacity Assessment Plan. In either case, both the overall approach proposed and the specific analyses to be applied to the WCTS shall be described in detail.

b. The Capacity Assessment Plan shall propose rainfall monitoring and in-stream flow metering to measure actual flow in the WCTS. The flow and rainfall monitoring network shall be designed, installed, operated and maintained to provide representative data of sufficient quality for use in the development of the Capacity Assessment. Monitoring site selection, equipment selection and installation, calibration, maintenance, and data quality assurance checks shall all be carried out to optimize monitoring accuracy, and shall conform to the equipment manufacturers' recommendations and current, sound engineering practices. The flow monitoring and rainfall data shall be used to prioritize additional flow monitoring and physical investigation activities.

c. The Capacity Assessment Plan shall include plans to evaluate pump station capacity as part of the system hydraulic analysis and identify any pump station deficiencies that cause or contribute to SSOs or the likelihood of SSOs in the absence of constructed overflows.

d. The Capacity Assessment Plan shall indicate the design storm that will be utilized to calculate surcharge conditions in the WCTS. The choice of design storm shall be based on actual historic rainfall data, or otherwise justified using sound engineering practices.

e. The Capacity Assessment Plan shall include plans to evaluate worst-case (high flow/high groundwater) conditions, and all expected upstream and

downstream influences, including hydraulic capacity and I/I, on each reach of a sewer affecting "critical mini-systems." For the purpose of this Order, "critical mini-systems" are defined as those "mini-systems" in the WCTS that have experienced SSOs in the past five (5) years; currently have, or have had within the past five years, a constructed overflow built into the WCTS; and are upstream of areas experiencing SSOs or having constructed overflows. A "mini-system" is a particular segment or section within the WCTS described by alpha-numeric numbers and used as a mapping identification tool to divide the WCTS into smaller manageable subsystems.

ii. Capacity Assessment Report

a. Within twelve (12) months after approval of the Capacity Assessment Plan the City shall complete the Capacity Assessment and submit a Capacity Assessment Report.

b. The Capacity Assessment Report shall provide summary information on how the various collection system components were modeled and describe all simplifying assumptions that were used in the modeling effort. The hydraulic analysis results shall include a diagram of the hydraulic grade lines and surcharge conditions for each critical mini-system, an explanation of limiting factors (i.e., why the pipe surcharges at a given flow), and an analysis of pump station capacity affecting each segment analyzed. The Capacity Assessment Report shall identify any anticipated SSOs caused by the elimination of constructed overflows.

c. The Capacity Assessment Report shall include a map or maps of usable scale of the WCTS, including the tributary pipes, that clearly displays the location of all known SSOs reported in the past five (5) years and constructed overflows. The map(s) shall clearly identify each "mini-system" as defined by the City and identify critical mini-systems. The map(s) may be divided into subsections and multiple pages for clarity.

d. The Capacity Assessment Report shall include an estimated number of sewage customers (per capita) for each critical mini-system. Estimations shall be made using all applicable categories of the "Discharge Facilities" and "Design Units" categories of Appendix 2-A (Table for Design Basis for New Sewer Works) of the *Tennessee Design Criteria for Sewage Works*. The number of design units per discharge facility must be justifiable and based on sound engineering judgment. The Capacity Assessment Report shall also provide the volume of sewage transmitted and treated from all Significant Industrial Users.

e. The Capacity Assessment Report shall provide results of the hydraulic and excessive I/I analyses of all critical mini-systems in the WCTS, including per capita usage calculations for each critical mini-system.

f. The Capacity Assessment Report shall include a collection and transmission system model to assist in the development and implementation of operation and maintenance procedures to optimize transmission capacity within the WCTS and to evaluate the impact of excessive I/I rehabilitation projects, proposed modifications, upgrades, and expansions on the transmission capacity.

g. The Capacity Assessment Report shall include a calculation of the amount of increased flow that will be transmitted to the WWTP as a result of eliminating constructed overflows and SSOs in the WCTS, and assess the impact of increased flow to the WWTP.

iii. Sewer System Evaluation Survey

a. Within six (6) months of the effective date of this Order, the City shall submit a Sewer System Evaluation Survey Work Plan for EPA's review, comment and approval. This Sewer System Evaluation Survey Work Plan will describe how the City will undertake a Sewer System Evaluation Survey (SSES) that will result in the systemic examination of the sewer system to determine specific locations, estimated flow rates, methods of rehabilitation, and cost of rehabilitation versus the cost of transportation and treatment for each defined source of excessive I/I. The Sewer System Evaluation Survey Work Plan shall include plans to identify and quantify SSOs; identify and quantify sources of excessive I/I rates within the Sewershed; identify sections of the Sewershed with excessive I/I rates that cause and/or contribute to SSOs; identify cross connections and unauthorized connections; and identification of physical degradation of the WCTS, including general pipe condition and condition of force mains, that causes or contributes to SSOs. Upon EPA-approval of the Sewer System Evaluation Survey Work Plan, the City shall implement the Work Plan in accordance with the schedules therein.

b. The Sewer System Evaluation Survey Work Plan may propose to incorporate appropriate and accurate existing attribute data, and as necessary, the collection and use of additional physical attribute data; verified existing rainfall and flow data, and as necessary, the collection and use of additional flow and rainfall data; monitoring of WWTP flows and flows at key locations within the WCTS; monitoring of groundwater and rainfall at appropriate locations throughout the WCTS; physical investigation of the causes of excessive I/I and SSOs; and documentation of the condition of the portions of the WCTS causing or contributing to SSOs. The Sewer System Evaluation Survey Work Plan shall include the planned locations, types and rationale for placement of rain gauges, flow monitors, and any other equipment, and a discussion of how Doppler radar will be employed (if appropriate). The Sewer System Evaluation Survey Work Plan may also propose to utilize existing monitoring and characterization data

only to the extent that the data are of adequate quality and for locations appropriate for the purposes of the SSES. The Sewer System Evaluation Survey Work Plan shall identify all existing data to be utilized; identify all additional data to be collected; and describe in detail how the existing and proposed additional data will satisfy the objectives of the SSES.

c. The SSES shall include, and the Sewer System Evaluation Survey Work Plan shall also establish plans to include, the following:

(1) A review of existing data to be used for SSOs, sewage flows, WWTP and WCTS attributes (e.g., pipe diameters, pipe segment lengths, diversion structure characteristics, catchment characteristics, invert elevations, pipe interior roughness coefficients, etc.), rainfall, and groundwater levels; and an evaluation of the accuracy, completeness and adequacy of such existing data for purposes of supporting the characterization of the WCTS and sources of extraneous wet weather flow. The data review shall further identify all additional data needed to allow the SSES to satisfy the objectives stated herein.

(2) Dry weather monitoring so as to allow the characterization of base flows and excessive I/I rates. Wet weather monitoring following events of sufficient duration and intensity to cause significant excessive I/I in the system, to allow the prioritization of mini-systems, and to support the development of the Capacity Assessment.

(3) A network of rain gauge stations placed in accordance with industry standards and sound engineering practice.

(4) Flow data collected using permanent and/or temporary flow monitors placed at locations in the WCTS necessary to allow the characterization of flow from each critical mini-system. The City shall inspect, maintain, and calibrate (if necessary) all flow monitors at least once per week.

d. The Sewer System Evaluation Survey Work Plan shall contain requirements to perform investigative activities in the locations determined to have excessive I/I, any critical mini-systems, and any portions of the WCTS that cause or contribute to SSOs. The investigative activities shall be designed to locate and allow estimation of the wet weather flows associated with individual sources of excessive I/I, or shall identify physical degradation of the WCTS that causes or contributes to SSOs. The investigative activities shall include, but not be limited to, additional flow monitoring to isolate sources of excessive I/I; smoke

testing; visual inspections of pipes and manholes; dye testing; night flow isolation; CCTV inspection to identify sewers in need of repair, rehabilitation, or replacement; and building inspections. The further investigative activities shall be sufficient to allow detailed characterizations of all significant sewer defects in sewer sub-basins (mini-systems) with excessive I/I and SSOs and to support the development of capital improvement schedules.

e. The Sewer System Evaluation Survey Work Plan shall include expeditious schedules for performing and completing the SSES, including timelines for installation of sewer flow and rainfall monitoring equipment; completion of all monitoring activities, and for submitting the SSES Results. The SSES shall be completed no later than twelve (12) months after EPA-approval of the Sewer System Evaluation Survey Work Plan. The SSES Results shall be submitted within two (2) months after completion of the Survey.

f. For the purposes of this Order, excessive I/I includes those sections of the sewer shed that experience an excess of 275 gallons per capita per day (gpcd) of wet weather flow. The City must clearly demonstrate that each mini-system not included in a more detailed excessive I/I analysis is experiencing less that 275 gpcd of excessive I/I from a typical 2-year, 24-hour storm; justification must include the estimated per capita users for each critical mini-system identified for exclusion, and all pertinent data and calculations used to determine per capita usage at the point in the mini-system entering a gravity sewer interceptor (gravity sewer pipe greater than or equal to 12 inches in diameter or the final exit point or points from a mini-system). This paragraph does not apply to critical mini-systems as defined in Paragraph 16.B.i.e above.

iv. WCTS Remediation Plan

a. Within two (2) months of submission of the SSES Results, the City shall develop and submit for EPA review, comment and approval, a WCTS Remediation Plan with specific measures and schedules that, when implemented, will result in elimination of all constructed overflows and adequate capacity in its wastewater collection and transmission system, such that SSOs will be eliminated under current and future conditions.

b. The WCTS Remediation Plan shall identify all measures necessary to achieve adequate capacity. Adequate capacity is that capacity needed to collect, convey and treat anticipated peak wet weather flows, without causing SSOs. At a minimum, peak wet weather flows shall include the conditions considered as part of the Capacity Assessment. If insufficient capacity to accommodate projected peak wet weather flows exists in any portion of the system, the City shall identify and propose measures to provide adequate capacity to eliminate SSOs.

c. The WCTS Remediation Plan shall identify all measures necessary to eliminate all SSOs caused by physical degradation of sewers, inadequate system capacity, including pump station capacities, or poor pump station reliability. The Plan shall also identify all measures necessary to eliminate any anticipated SSOs identified during the hydraulic analysis as a result of eliminating constructed overflows currently located throughout the WCTS.

d. The WCTS Remediation Plan shall identify the degree to which sources of excessive I/I shall be removed, and the degree to which excessive I/I removal is expected to alleviate capacity constraints, and propose specific remedial measures that will address those capacity limitations not expected to be addressed by excessive I/I removal. Anticipated excessive I/I removal rates used in the development of the WCTS Remediation Plan shall reflect current industry practice and local experience. Specific remedial measures to address capacity limitations may also include increases in pump station and sewer capacity in the WCTS, construction of storage or equalization basin facilities, or increases in wastewater treatment capacity.

e. The WCTS Remediation Plan shall prioritize the remedial measures based upon: (1) relative likely human health and environmental impact risks; (2) SSO frequencies of activation; and (3) total annual SSO volumes. The WCTS Remediation Plan shall provide a description of the methodology used in the prioritization.

f. The WCTS Remediation Plan shall provide basic project descriptions, estimated capital costs and a schedule for design, construction, and placement in service of all proposed measures that is as expeditious as possible, but in no event later than three (3) years after submission of the WCTS Remediation Plan (the Remediation Date). In addition, the WCTS Remediation Plan shall identify estimated begin/complete design, permitting, award contract, begin/complete construction dates for each measure proposed. In the event that major sewer interceptor replacement (or other major capital improvement) is identified as a result of the Capacity Assessment and/or SSES, the City may request, in writing and with supporting documentation, for an extension beyond the Remediation Date. Approval of any extension beyond the Remediation Date shall be at EPA's discretion and in writing.

C. Sanitary Sewer Overflow Response Plan

Within six (6) months of the effective date of this Order, the City shall submit a Sewer Overflow Response Plan (SORP) for EPA's review, comment and approval that will establish timely and effective methods and means of responding to, cleaning up, and/or minimizing the impact of all SSOs; timely reporting of the location, volume, cause, impact, and other pertinent

information of all SSOs to the appropriate regulatory agencies; and notification methods to the potentially impacted public.

i. The SORP shall provide procedures for orally reporting to TDEC the location of any SSO by street address or any other appropriate method (i.e., latitude-longitude) within twenty-four (24) hours of the time the City first becomes aware of the SSO.

ii. The SORP shall provide procedures for written reporting to TDEC within five (5) days of the time the City first becomes aware of the SSO. At a minimum, a written report shall contain the following:

a. Location of the SSO by street address, or any other appropriate method (i.e., latitude-longitude).

b. Estimated date and time when the SSO began and stopped, or if still active, the anticipated time to stop the SSO.

c. Steps taken to respond to the SSO.

d. Name of the receiving water, if applicable.

e. An estimate of the volume (in gallons) of sewage discharged.

f. Description of the sewer system component from which the SSO was released (ie., manhole, crack in pipe, pump station wet well, constructed overflow pipe).

g. Estimate of the SSO's impact on public health and water quality in the receiving water body.

h. Cause or suspected cause of the SSO.

i. The date of the last SSO at the same location.

j. Steps taken or to be taken to reduce, eliminate, and prevent reoccurrence of the SSO with a schedule of major milestones for those steps.

k. Report of all notifications to the public and other agencies or departments.

iii. The SORP shall provide procedures for maintenance of records for at least five (5) years from the date of an SSO, including all written reports to the State; records documenting steps that have been and will be taken to prevent the SSO from recurring, including work order

records associated with investigation and repair activities; and a list and description of complaints from customers or others regarding an SSO.

iv. The SORP shall provide procedures for responding to SSOs to minimize the environmental impact and potential human health risk, and shall include, but not be limited to, the following:

a. A detailed description of the procedures to immediately provide notice to the public (through the local news media or other means including signs or barricades to restrict access).

b. A detailed description of the procedures to provide notice to appropriate federal, state or local agencies/authorities.

c. A detailed description of the procedures (including response standard operating procedures) to minimize the volume of untreated wastewater transmitted to SSO location.

d. A detailed description of pump station-specific emergency procedures, bypass/ pump-around strategies, and estimated storage capacity (i.e., maximum volume of sewage that can be stored in the event of a pump station failure or repair without causing a SSO and estimated time during which sewage can be stored before a SSO will occur).

e. In the event that a repair may cause or lengthen the time of a SSO, a detailed procedure for determining when additional storage or pump around will be needed.

f. A detailed plan describing the standard operating procedures to be followed by City personnel in responding to building backups, including:

(1) Methods for communicating with customers about how to report building backups and how to obtain clean-up.

(2) Response to building backups, including timeframe for responses, measures to be taken to clean up building backups caused by conditions in the City's Sewer System, procedures to disinfect and/or remove potentially contaminated items (ie., wet vacuuming, wiping floors and walls with disinfectant, flushing out and disinfecting plumbing fixtures, carpet cleaning or replacement), procedures to correct or repair conditions in the Sewer System causing or contributing to the building backup, and the follow-up process to insure adequacy of cleanup.

(3) Resources to correct or repair the condition causing or contributing to the building backup.

v. The SORP shall provide procedures for providing adequate training necessary for City employees, contractors, and personnel of other affected agencies to effectively implement the SORP. The SORP shall provide training guidelines to ensure adequate response training is provided to management and field personnel responsible for responding to SSOs. The SORP shall provide procedures for adequate training to response personnel for estimating volumes from SSOs.

vi. The City shall identify and include in the SORP a list of those SSO locations within the sewershed that has been recorded as overflowing more than once and those locations at which a SSO is likely to occur first in the event of pump station failure for each pump station. The SORP shall provide procedures for establishing routine inspection routes to be performed after each rain event. The inspection routes shall include all SSO locations identified as having occurred more than once, and all pump stations that are not monitored at a central location via remote monitoring devices.

D. Management, Operation, and Maintenance Programs

The City shall develop the following Management, Operation, and Maintenance (MOM) Programs under the schedule set forth below. All MOM Programs shall be developed in accordance with EPA Region 4 guidance as set forth in the enclosed CDROM disk. The City shall ensure that such Programs contain the following key MOM elements: written, defined purpose; written, defined goals; written documentation with specific details; implementation by trained personnel; establishment of performance measures; and written procedures for periodic review. Within twelve (12) months of EPA's approval of a MOM Program, the City shall certify to EPA that such MOM program has been fully implemented.

i. Information Management System (IMS) Programs

a. Within nine (9) months of the effective date of this Order, the City shall develop and submit for EPA's review, comment and approval the Information Management System (IMS) Programs as described below. Each IMS Program shall include, but not be limited to, a description of information fed into the system, how it is entered and by what means it is recorded; types of work reports prepared and submitted, including examples and periodic review of such reports; a description of the management reports generated from the input data (i.e. work reports), including examples and periodic review of such reports; standard forms used by both field personnel and management for the program, where applicable; a detailed description of how the records are maintained; and a description of any computer software used with cited references for training and procedures.

b. The Management IMS Program shall provide utility managers guidelines and instructions to adequately evaluate operations, maintenance, customer service, and system rehabilitation activities so that overall system performance can be evaluated and utility planning can be conducted.

c. The Operations IMS Program shall provide managers and field supervisors guidelines to adequately track scheduled operational activities to enhance operational performance, utilizing operating reports and standard operation forms to be used by field personnel, and shall provide for field supervisor review. The Operations IMS Program shall be capable of feeding information into the Management IMS Program.

d. The Maintenance IMS Program shall provide managers and field supervisors guidelines to adequately track scheduled maintenance activities and to enhance maintenance performance, utilizing maintenance reports and standard maintenance forms to be used by field personnel, and shall provide for field supervisor review. The Maintenance IMS Program shall be capable of feeding information into the Management IMS Program.

e. The Complaint Tracking IMS Program shall provide managers guidelines to adequately assess and manage complaint information, utilizing standard complaint forms to be used by personnel, and shall provide for supervisor review. The Complaint Tracking IMS Program shall be capable of feeding information into the Management IMS Program.

f. The Performance Indicators Computation IMS Program shall provide managers with guidelines to adequately evaluate data collected from the IMS Programs to determine the condition of the WCTS, and shall include identification of performance indicators (i.e., SSO data, per capita waste flow, effluent compliance) and a process for evaluating the performance of the City's MOM and customer service programs.

ii. Engineering Programs

a. Within twelve (12) months of the effective date of this Order, the City shall develop and submit for EPA's review, comment and approval the Engineering Programs as described below. Each Engineering Program shall include standard forms and record procedures, where applicable, and shall include procedures to feed information into the IMS programs.

b. The Sewer Mapping Program shall include, but not be limited to, a description of the City's mapping procedures (CCTV requirements, survey requirements, etc.); requirements for recording changes and updates to the sewer maps; utility specific map inclusions and labeling requirements to include

manholes, pump stations, force mains, air release valves and any other applicable appurtenances that may affect the performance of the WCTS or WWTP; and annual review procedures.

c. The Sewer System Design Program shall include, but not be limited to, a brief description of the City's design procedures pertaining to sewer system design, including reference documents (citation information); a description of the utilities design review process, including approval authority; and a description of the utilities capacity analysis procedures for the WCTS and the WWTP used to determine the ability of existing systems to transmit or treat future flow created by expanding development.

d. The Sewer Construction and Rehabilitation Inspection Program shall include, but not be limited to, a brief description of the City's sewer system specific inspection procedures, including reference documents (citation information); specific instructions not included in referenced ordinances or other documents; a description of the sewer system specific inspection requirements and processes including any authority given to an inspector by the City, if so assigned; and post-inspection requirements (CCTV, testing, etc.) and approval authority for acceptance of completed projects at the City management level.

e. The Continuing Sewer System Assessment Program shall include, but not be limited to, dyed water flooding; routine manhole inspections; flow monitoring program; CCTV program; smoke testing; service lateral investigations; and specific procedures including schedules and/or events (i.e. blockage, infiltration/inflow and back-ups) which may require a specific program.

f. The Pump Station Performance and Adequacy Program shall include, but not be limited to, a description of installed systems and equipment; procedures used to collect data from pump stations; and specific data to be collected.

g. The Infrastructure Rehabilitation Program shall consist of a Gravity Lines Rehabilitation Program and a Manhole Rehabilitation Program, and shall include, but not be limited to, a process to identify and prioritize identified rehabilitation work; a prioritized list of manholes identified in the City's Sewer System Evaluation Survey completed in 1993 listed as "poor" and "very poor" and a rehabilitation plan; an inventory of manhole rehabilitation completed and scheduled since the completion of the Sanitary Sewer Evaluation Survey completed in 1993; a plan to evaluate gravity lines for necessary rehabilitation; an inventory of gravity line rehabilitations completed and scheduled since the completion of the City's Sewer System Evaluation Survey completed in 1993; and written schedules for rehabilitation work.

iii. Pump Station Operation Programs.

a. Within twelve (12) months of the effective date of this Order, the City shall develop and submit for EPA's review, comment and approval the Pump Station Operations Programs as described below to manage the City's pump station and lift station operations. Each Pump Station Operation Program shall include shall include provisions for both manned and un-manned pump stations, standard forms and record procedures, where applicable, and procedures to feed information into the IMS Programs.

b. The Routine Pump Station Operation Program should ensure prevention of pump station failures and shall include, but not be limited to, procedures for reading and recording information appropriate to each pump station or lift station including, as applicable, pump run-time meter readings, start counters, amperage readings, checking and resetting conditions, wet-well points, grease accumulations and any other information that is necessary for the proper operation of a pump station or lift station; and development of standard inspection routes and schedules.

d. The Emergency Pump Station Operation Program should provide for emergency operations in the event of pump station failure, and shall include, but not be limited to, written standard emergency operating procedures for each type of pump station or lift station; emergency contact information; location(s) of auxiliary power including portable or fixed emergency generators applicable to each pump/lift station; location(s) of portable pumping equipment; guidance for initiating auxiliary power with portable or fixed generators; guidance for installing portable pumps during high flow; and applicable contingency plans.

iv. Maintenance Programs

a. Within twelve (12) months after approval of the Capacity Assessment Plan, the City shall submit to EPA a Pump Station Report which shall include an evaluation of the condition of each pump station and associated force mains; whether each pump station is capable of operating at full design capacity; a schedule of repair for each pump station identified as in need of repair or operating below design capacity; whether emergency (back-up) electrical power is available (portable or fixed) for the pump station; and any scheduled repair or replacement. Pump stations identified as causing or that may cause SSOs (ie., operating below design capacity) shall be incorporated in the Collection System Remediation Plan and subject to the remediation deadline pursuant to Paragraph 15.B.iv above. All pump stations identified as in need of repair shall be placed in the Pump Station Repair Program described below.

b. Within fifteen (15) months of the effective date of this Order, the City shall develop and submit for EPA's review, comment and approval the Maintenance Programs as described below for both manned and un-manned pump stations. The City shall ensure that routine inspections are included in the Maintenance Programs. Each Maintenance Program shall include standard forms and record procedures, where applicable, and procedures to feed information into the IMS Programs.

c. Pump Station Preventive Maintenance Programs. The City shall develop and implement Pump Station Preventive Maintenance Programs to reduce the need for reactive maintenance. The Pump Station Preventive Maintenance Programs shall consist of an Electrical Maintenance Program, a Mechanical Maintenance Program, and a Physical Maintenance Program. These Pump Station Preventive Maintenance Programs shall include, but not be limited to, list of personnel responsible for preventive maintenance, guidance for scheduling preventive maintenance, and standard tag out/lock out procedures.

(1) The objective of the Electrical Maintenance Program shall be to provide guidance to managers and field personnel responsible for electrical maintenance to ensure that preventive maintenance on pump station electrical components are performed on a routine basis. This program shall include meter calibration schedules for any meter used to record data collected at or from the pump station.

(2) The objective of the Mechanical Maintenance Program is to provide guidance to managers and field personnel responsible for mechanical maintenance to ensure that preventive maintenance on pump station mechanical components are performed on a routine basis.

(3) The objective of the Physical Maintenance Program is to provide guidance to managers and field personnel responsible for physical maintenance (pipes, walls, inverts, covers, etc.) to ensure that preventive maintenance on pump station physical components are performed on a routine basis.

d. Pump Station Repair Program. The City shall develop and implement a Pump Station Repair Program to identify, prioritize, schedule and repair pump stations on a timely basis once the pump station has deteriorated beyond the scope of the Preventive Maintenance Programs. The Pump Station Repair Program shall include, but not be limited to, factors to determine when a pump station is to be placed in the Pump Station Repair Program, a prioritized inventory of pump

stations and lift stations in need of repair, an ongoing inventory of completed repairs, and a work schedule for repairs.

e. Gravity Line Preventive Maintenance Programs. The City shall develop and implement a Gravity Line Preventive Maintenance Program to provide guidance for routine pipe line clearing and cleaning, and to establish standard operating procedures to deter or eliminate blockage in the gravity sewer lines. The Gravity Line Preventive Maintenance Program shall include, but not be limited to, guidelines for scheduling hydraulic cleaning, root clearing, and mechanical cleaning activities; personnel responsible for each activity; equipment available for each activity; and a schedule of preventive maintenance, including routine inspections.

17. EPA will review submitted Plans, Programs and other documents described above and will either approve the submittals or provide comments. The City shall address any comments provided by EPA and resubmit a revised Plan, Program or other document within two (2) weeks of receipt. In the event of any disagreement, EPA will consider the City's position and make a final determination. The City shall begin implementation of any approved Plans and Programs within one (1) month of receipt of EPA's approval unless otherwise stated above.

18. The City shall submit to EPA written quarterly progress reports (Quarterly Reports). A Quarterly Report is due the 28th of the month following the end of a quarter (January-March, April-June, etc.). The first Quarterly Report is for the first full quarter after the Effective Date of the Order, and is due following the end of that full quarter. Quarterly Reports shall include:

A. A description of the actions which have been taken toward achieving compliance with this Order since the previous Quarterly Report.

B. An assessment of the effectiveness of such actions in preventing SSOs.

C. A list of any SSOs that occurred since the previous Quarterly Report. The list shall include the data specified in Paragraph 15.B.iii above.

19. The City may submit a request for any extension of time to comply with the requirements of this Order in writing. Such request must include the reasons for the extension request and a date when compliance will be achieved. Failure to obtain federal, state, or local permits or approvals shall not be a basis for an extension unless the City has sought such permits or approvals in a timely and complete manner. Any extension must be approved by EPA in writing to be effective.

20. All reports, notifications, documentation, and submittals required by this Order shall be signed by a duly authorized representative of the City as specified by 40 C.F.R. §§ 122.22(b)(2) and (d) and shall include the following statement:

"I certify under the penalty of law that this document and all attachments were prepared under my direction or supervision in accordance with a system designed to assure that qualified personnel properly gather and evaluate the information submitted. Based on my inquiry of the person or persons who manage the system, or those persons directly responsible for gathering the information, the information submitted is, to the best of my knowledge and belief, true, accurate, and complete. I am aware that there are significant penalties for submitting false information, including the possibility of fine and imprisonment for knowing violations."

21. All reports, programs, plans notifications, documentation, and submittals required by this Order shall be sent by certified mail or its equivalent to the following address:

Denisse D. Diaz. Acting Chief
Clean Water Enforcement Branch
Water Protection Division
ATTN: Mr. Dennis J. Sayre
U.S. Environmental Protection Agency, Region 4
61 Forsyth Street, S.W.
Atlanta, Georgia 30303-8960

V. General Provisions

22. Failure to comply with the requirements herein shall constitute a violation of this Order and the CWA, and may subject the City to penalties as provided in Section 309(d) of the CWA, 33 U.S.C. § 1319(d).

23. This Order shall not relieve the City of its obligation to comply with all applicable provisions of federal, state or local law, nor shall it be construed to be a ruling on, or determination of, any issue related to any other federal, state or local permit. Compliance with this Order shall not be a defense to any actions subsequently commenced pursuant to federal laws and regulations administered by EPA.

24. Nothing in this Order shall be construed as prohibiting, altering, or in any way limiting the ability of the United States to seek any other remedies or sanctions available by virtue of the City's violation of this Order or of the statutes and regulations upon which this Order is based, or for the City's violation of any other federal or state statute, regulation or permit.

25. Nothing in this Order is intended to nor shall be construed to operate in any way to resolve any criminal liability of the City, or other liability resulting from violations that were not alleged in this Order. The United States does not waive any right to bring an enforcement action against the City for violation of any federal or state statute, regulation or permit, to initiate an action for imminent and substantial endangerment, or to pursue criminal enforcement.

26. This Order applies to and is binding upon the City and its officers, directors, employees, agents, successors and assigns.

27. Any change in the legal status of the City, including but not limited to any transfer of assets of real or personal property, shall not alter the City's responsibilities under this Order.

28. Pursuant to Section 309(a)(4) of the CWA, 33 U.S.C. § 1319(a)(4), EPA has sent a copy of this Order to the State of Tennessee.

29. The provisions of this Order shall be deemed satisfied upon a determination by EPA that the City has fully completed and implemented the actions required by this Order.

VI. Effective Date

30. The effective date of this Order shall be the date upon which it is received by the City.

IT IS SO ORDERED,
BY THE U.S. ENVIRONMENTAL PROTECTION AGENCY, REGION 4

James D. Giattina
Director
Water Protection Division

SEP 27 2010
Date

PREFACE

Oak Ridge was organized under the modified city manager-city council charter. This charter, originally drafted in 1952 as proposed private act legislation for the incorporation of Oak Ridge, was rewritten and passed by the Tennessee General Assembly as an optional general law. The charter was adopted by Oak Ridge citizens May 5, 1959.

The City of Oak Ridge was incorporated under that law, codified as Chapters 30 through 36 of Title 6, Tennessee Code Annotated. Those chapters became the Home Rule Charter of the City as a result of a referendum held November 7, 1962. A home rule charter can be changed by local referendum, but the Tennessee General Assembly cannot pass private acts to affect cities like Oak Ridge. Oak Ridge must follow laws that affect Tennessee cities generally unless such laws provide for local option.

Amendments to any home rule charter must be approved by a local referendum, and may be placed on the ballot in any of three ways. Charter amendments may be proposed by ordinance of a home rule municipality; by a charter commission provided for by the General Assembly; or by a charter commission of seven (7) members chosen at-large not more often than once in two (2) years in a municipal referendum pursuant to a petition for such election signed by at least 10 percent of the qualified voters who voted in the most recent general municipal election.

Amendments to the original Oak Ridge Charter have been placed on referenda in 1964, 1966, 1974, 1976, and 1986. Copies of each edition of the charter are on file in the office of the city clerk.

The Charter Commission elected in June 2003 voted to retain the city manager-city council form of government and to make no major change in the mode of operation of the city. The Commission proposed this revised and updated charter based on the original charter as amended through 1986, but consistent with prevailing laws and current methods of communication and operation. This revised charter was approved by Oak Ridge voters in a referendum on August 5, 2004.

In accordance with Article III, Section 14, of the Charter, City Council appointed a seven member Charter Review Committee at its July 16, 2007 meeting whose duty it was to review the charter to ensure consistency with State law. This Review Committee approved four (4) separate changes to the charter which were approved by the voters at the August 7, 2008 General Election.

On November 4, 2008, a seven (7) member Charter Commission was elected by the voters after a petition calling for the election was circulated among the citizens of Oak Ridge. This Commission approved eight (8) changes to the charter. A resolution containing the changes to be placed on the November 2, 2010 ballot was forwarded to the Election Commission, and all the changes were approved by the voters at this election.

CHARTER OF THE CITY OF OAK RIDGE, TENNESSEE[1]

TABLE OF CONTENTS

SECTION PAGE

ARTICLE I

ELECTIONS

1. Method of electing governing body C-7
2. Time of elections C-7
3. Qualifications for voting C-7
4. Nonpartisan elections C-7
5. Eligibility for office of council member C-7
6. Nomination of council members C-8
7. Term of office C-8
8. Restrictions on candidates and supporters -- Penalty C-8
9. Time of taking office C-8
10. Oath of office C-8
11. Vacancies in council C-9
12. Recall petition -- Members of city council and board of education C-9
13. Recall elections C-9

ARTICLE II

COUNCIL AND MAYOR

1. Regular meetings of council C-10
2. Special meetings of council C-10
3. Council meetings to be public C-10
4. Quorum of council C-10
5. Attendance and conduct at council meetings C-10
6. Mayor C-10
7. Mayor pro tem C-11
8. Council rules -- Transaction of business C-11
9. Powers to subpoena C-11

---

[1]All of the City of Oak Ridge's "home rule" amendments through 2009 have been incorporated. Each section of the charter which has been amended by the city carries a citation to the ordinance responsible for such amendment.

SECTION PAGE

10. Compensation of council and mayor C-11
11. Form of ordinance C-12
12. Passage, preservation and publication of ordinances C-12
13. Codification of ordinances C-13
14. Rules and regulations C-13

ARTICLE III

POWERS OF CITY AND COUNCIL

1. Powers under general statutes C-14
2. City judge -- Clerk and employees of city court C-14
3. City court C-15
4. Removal of city judge C-15
5. Advisory boards C-15
6. Planning commission C-16
7. Intergovernmental agreements and contracts C-16
8. Arrangements and contracting powers C-16
9. Liability of officers C-17
10. Deposits and disbursements of funds C-17
11. Franchises C-17
12. Official city newspaper C-18
13. City attorney C-19
14. Periodic charter review C-19

ARTICLE IV

TAXATION AND ISSUANCE OF OBLIGATIONS

1. Assessments C-20
2. Equalization board -- Establishment C-20
3. Levy, due date and delinquencies C-20
4. Municipal debt C-20

ARTICLE V

CITY MANAGER – ADMINISTRATION OF CITY AFFAIRS

1. Appointment, term and qualifications of city manager C-21
2. Temporary absence of manager C-21

SECTION PAGE

3. Council-manager relationships C-21
4. Duties and authority of manager C-21
5. Administrative organization C-22
6. City clerk C-22
7. Assessment and collection of taxes C-22
8. Administration of finances C-22
9. Fiscal year C-23
10. Manager to prepare budget -- Contents C-23
11. Capital budget program C-23
12. Public hearing on budget -- Inspection -- Distribution C-24
13. Adoption of budget -- Appropriation ordinance C-24
14. Amendments to appropriation ordinance C-24
15. Unexpended appropriation to lapse C-25
16. Budget control C-25
17. Purchasing C-25
18. Management of city property and equipment C-26
19. Annual audit C-27
20. Fees paid to city C-27
21. Depository for city funds C-27
22. Appointment, removal and supervision of personnel under the city manager C-27
23. General personnel policy C-27
24. Manager to administer merit system C-28
25. Investigation of complaints by personnel advisory board -- Findings -- Review C-28
26. Personnel advisory board to assist manager C-29
27. Compensation of officers and employees C-29
28. Salary or wages to be only compensation -- Disposition of fees and commissions C-29
29. Employee welfare benefits C-29
30. Separations and resignations C-29
31. Surety bonds of officers and employees C-30
32. Pecuniary interest prohibited C-30
33. Political activity prohibited C-30
34. Financial records of utilities C-30
35. Disposal of utility plants and property C-30

SECTION PAGE

ARTICLE VI

PUBLIC SCHOOLS

1. Board of education C-32
2. Nomination and election of board members C-32
3. Election of board of education -- Term of office C-32
4. Board of education chair -- Vice-chair C-32
5. Powers and duties of board of education C-33
6. Rules of procedure and meetings C-33
7. Vacancies on board C-34
8. Compensation of board members C-34
9. Superintendent of schools -- Board secretary C-34
10. Powers and duties of superintendent of schools C-35
11. Officers and employees of school system C-36
12. Financial management C-36
13. School budget C-37
14. Notice of appropriation C-37
15. Purchases and contracts C-37
16. Disbursements C-38
17. Transfer of city schools to county C-38
18. Agreement with county to take over county schools C-38
19. Resolution of conflict with state laws C-38

ARTICLE I

ELECTIONS

Section 1. Method of electing governing body.

All corporate, legislative, and other powers of the city, except as otherwise provided in Articles I through VI inclusive of this Charter, shall be vested in a Council, and said Council shall be composed of seven (7) members to be elected at large.

Election to the Board of Education shall be as provided in Article VI of this Charter.

Elections shall be conducted under the provisions of the Tennessee Code Annotated 2-1-102, et seq.

Section 2. Time of elections.

A regular city election shall be held biennially on the date of the general state election held on the first Tuesday after the first Monday in November of even-numbered years in accordance with the general election laws of the State of Tennessee. [As amended by referendum, November 11, 2010]

Section 3. Qualifications for voting.

For the purposes of city elections, a citizen of the United States eighteen (18) years of age or older who is a resident of this state and the City of Oak Ridge is a qualified voter unless the citizen is disqualified under the provisions of this Charter or under a judgment of infamy pursuant to TCA 40-20-112.

Section 4. Nonpartisan city elections.

All city elections shall be nonpartisan.

Section 5. Eligibility for office of council member.

Any qualified voter of the city shall be eligible for election to the council, if the voter has been a resident of the city for one (1) year next preceding the day of election and provided that before taking office the elected voter resign any position of employment with the city, or office filled by state, county, or other municipal public election. [As amended by referendum, November 11, 2010]

Section 6. Nomination of council members.

Nomination of Council members shall be conducted in accordance with the general election laws of the State of Tennessee. [As replaced by Ord. #15-08, May 2008, which was approved by the voters at the August 7, 2008 General Election]

Section 7. Term of office.

Four (4) council members shall be elected for a term of four (4) years in the regular city election of June 2005, and three (3) council members shall be elected in the regular city election of June 2007 for a term of four (4) years. Commencing with the next following regular city election and at all subsequent regular city elections thereafter, the council seats then becoming vacant shall be filled by council members each elected for four (4) year terms.

Section 8. Restrictions on candidates and supporters – Penalty.

If a candidate or any person on the candidate's behalf directly or indirectly gives or promises to any person or persons any office, employment, money, benefit, or anything of value in connection with the candidacy, the candidate shall thereafter be ineligible to hold any office or position of employment in the city government for a period of five (5) years.

Section 9. Time of taking office.

After certification of the election by the county election commission, persons elected to the office of council member shall take office upon taking the oath of office as provided in Article I, Section 10.

Section 10. Oath of office.

Every officer or employee, before taking any office in the city government, shall take, subscribe to and file with the city clerk the following oath or affirmation:

"I solemnly swear (or affirm) that I possess all the qualifications prescribed for the office (or position) of _____, as prescribed by this Charter, and that I will support the Constitution and will obey the laws of the United States and of the State of Tennessee, and that I will, in all respects, observe the provisions of the Charter and ordinances of the City of Oak Ridge, Tennessee, and that I will faithfully discharge the duties of the office (or position) of _____."

Section 11. Vacancies in council.

A vacancy shall exist if a council member resigns, dies, takes residence outside the city or has been continuously disabled for a period of three (3) months so as to prevent the council member from discharging the duties of the office, accepts any state, county or other municipal office which is filled by public election or position of employment with the city, or is convicted of malfeasance or misfeasance in office, a felony, a violation of this Charter, or a violation of the election laws of the state. A vacancy shall be filled within thirty (30) days by an affirmative vote of a majority of the remaining council members, the appointee to serve until the next regular city, county, or state election, at which time a successor shall be elected to fill the unexpired term. If a tie vote by the council to fill a vacancy is unbroken for thirty (30) days, the mayor shall appoint a qualified person to fill the vacancy. No appointment to fill the vacancy shall be made within sixty (60) days prior to any regular city, county, or state election.

Section 12. Recall petition – Members of city council and board of education.

Recall petitions initiated under the provisions of TCA 2-5-151 shall require the signature of at least fifteen (15) percent of the registered voters in the City of Oak Ridge. All petitions for recall shall be filed with the county election office within 75 days of certification by the election commission.

Section 13. Recall elections.

At recall elections, voters qualified to vote for a successor to the incumbent shall vote either "for recall" or "against recall." If at least sixty-six percent (66%) of those voting vote "for recall" the person named shall be declared removed from office and the office declared vacant. Such vacancy shall be filled as directed in Article I, Section 11, for city council and Article VI, Section 7, for members of the board of education. The said method of removal shall be cumulative and additional to the methods heretofore existing by law. No more than one election for the purpose of recall shall be held in any six (6) month period, and no such election shall be held within a period beginning ninety (90) days before and ending ninety (90) days after a regular municipal election.

ARTICLE II

COUNCIL AND MAYOR

Section 1. Regular meetings of council.

The council shall hold regular meetings in Oak Ridge at least once monthly. Increased frequency, time of day, and place of its meetings shall be established by resolution.

Section 2. Special meetings of council.

Special meetings shall be called by the clerk on the written request of the mayor, the manager, or any two (2) council member(s) by providing each council member with twenty-four (24) hours' written notice served personally or left at his or her usual place of residence. Business transacted at any special meeting shall be limited to subjects recited in the notice of such meeting.

Section 3. Council meetings to be public.

All council meetings shall be open to the public and citizens shall have a reasonable opportunity to be heard. The council shall exercise its powers only at public meetings.

Section 4. Quorum of council.

At least a majority of the members then in office shall be a quorum for the transaction of business at all council meetings; but in the absence of a quorum, two (2) members may adjourn the meeting to a later date.

Section 5. Attendance and conduct at council meetings.

The council may enforce orderly conduct and compel the attendance of its members and other city officers at its meetings. Any member of the council or other officer of the city who refuses to attend meetings when served with notice or conducts himself or herself in a disorderly manner thereat may be deemed guilty of misconduct in office. Upon council request the manager shall designate a police official or officer to serve as the sergeant-at-arms of the council.

Section 6. Mayor.

The council, at its first regular meeting following a regular city election and after all newly-elected members have been duly qualified, shall elect one of its members mayor for a term of two (2) years. Whenever a vacancy occurs in

the office of the mayor, the council shall elect one of its members to serve until the time fixed herein for the regular election of mayor. The mayor shall preside at meetings of the council, shall have a vote on all matters but no veto power, shall be the ceremonial head of the city, shall sign ordinances and resolutions on their final passage, shall sign deeds, bonds and contracts when authorized by the council to do so, shall be the officer to accept process against the city, shall not have any regular administrative duties, and shall perform only such duties as shall be specifically conferred.

Section 7. Mayor pro tem.

The council shall choose one of its members mayor pro tem who shall act in the temporary absence or disability of the mayor.

Section 8. Council rules – Transaction of business.

The council shall determine its own rules and order of business subject to the following provisions: The affirmative vote of at least a majority of the members of council then in office shall be required to approve any proposed action other than those listed in Article II, Section 2, and Article II, Section 4. There shall be a journal of proceedings of all council meetings, signed by the mayor and clerk and to which the public shall have access at all reasonable times. A summary of council proceedings shall be published in the official city newspaper within fifteen (15) days after a meeting, showing the substance of each council action. A vote upon all proposed ordinances and resolutions shall be taken by "yea" and "nay" vote, and the vote of each council member entered upon the journal. The journal shall also report the names of the council members present and absent, each motion considered, and the title of each ordinance or resolution considered. There shall be no standing committee of the council.

Section 9. Powers to subpoena.

The council may by resolution make investigations into the affairs of the city and the conduct of all city departments, offices, boards, commissions, committees, and agencies, and for this purpose may subpoena witnesses, administer oaths, take testimony, and require the production of evidence. [As replaced by referendum, November 11, 2010]

Section 10. Compensation of council and mayor.

Each member of council shall be compensated at the rate of one hundred and fifty dollars ($150.00) per month. The mayor shall receive the sum of one hundred and fifty dollars ($150.00) per month in addition to compensation as a

council member. Council shall establish rules under which members may be reimbursed for actual and necessary expenses incurred in the conduct of their official business.

Section 11. Form of ordinance.

Any action of council having a regulatory or penal effect, relating to revenue or the expenditure of money, or required to be done by ordinance under this Charter, shall be done only by ordinance. Each ordinance shall relate to a single subject, which shall be expressed in a title that contains a summary of its contents. Each ordinance shall be approved as to form and legality by the city attorney, and upon adoption shall be further identified by a number. The enacting clause of each ordinance shall be: "Be it ordained by the Council of the City of Oak Ridge, Tennessee." Other actions may be accomplished by resolutions or motions. Each resolution or ordinance shall be in written form before being introduced.

Section 12. Passage, preservation and publication of ordinances.

Each ordinance, before being adopted, shall be read at least by title at two meetings not less than one (1) week apart, and shall take effect ten (10) days after its adoption, except that, where an emergency exists and the public safety and welfare requires it, an ordinance containing a full statement of the facts and reasons for the emergency may be made effective upon its adoption if approved by a majority of the members of the council on two (2) readings on successive days. At least the title of each ordinance, except an emergency ordinance, shall be published in the official city newspaper at least one (1) week before its adoption and within ten (10) days after its adoption, either separately or as part of the published proceedings of the council. The newspaper publication shall include locations where the ordinance is available for public review. The entire ordinance shall be published on the city's website at least one (1) week before its adoption and shall remain on the website for a minimum of 30 days after its adoption. The ordinance shall be available at the public library and at the office of the city clerk, and upon adoption shall become a permanent record in the office of the city clerk. Amendments of ordinances and resolutions or parts thereof shall be accomplished only by setting forth the complete section, sections, subsection, or subsections in their amended form. An ordinance may be repealed by reference to its number and title only and publication of the ordinance may be similarly limited.

All ordinances and their amendments shall be recorded by the city clerk in a book to be known as the "ordinance book," and it shall be the duty of the mayor and city clerk to authenticate such records by their official signatures. A separate record shall be maintained for resolutions. The original copies of all

ordinances, resolutions, and minutes of City Council meetings shall be filed and preserved by the city clerk.

If any portion of an ordinance or the application thereof to any person or circumstances shall be found to be invalid by a court, such invalidity shall not affect the remaining portions or application, provided such remaining portions are not determined by the court to be inoperable, and to this end ordinances are declared to be severable.

Section 13. Codification of ordinances.

The council shall arrange for the regular codification of all ordinances having a regulatory effect or having continuing general application. Current loose-leaf editions of the official code shall be maintained and be made available for purchase by the public at a reasonable fee established by the council. Copies of the official code may be certified by the city clerk, and when so certified shall be competent evidence in all courts and legally established tribunals as to the matters contained therein.

Section 14. Rules and regulations.

The council may by ordinance authorize the city manager to formulate and promulgate formal rules and regulations having regulatory effect or having general application on various matters, subject to such restrictions and standards of guidance as the council may prescribe. No such formal rule or regulation shall take effect until it is filed with the city clerk, who shall file and preserve the original copy. Such rules and regulations shall be included as a separate section of the city code. Amendments of such rules and regulations shall be accomplished only by setting forth complete sections or subsections in their amended form.

ARTICLE III

POWERS OF CITY AND COUNCIL

Section 1. Powers under general statutes.

The City of Oak Ridge shall have all the powers and authority enumerated in Sections 6-2-201, 6-19-101 and 6-19-102, Tennessee Code Annotated, which are incorporated in this Charter by reference. The amendment of these sections of the Code shall not in any way change such powers as they apply to the City of Oak Ridge, but such powers shall be increased, decreased or changed only by amendment of this Home Rule Charter in the manner provided in Article XI, Section 9, of the Constitution.

Section 2. City judge – Clerk and employees of city court.

The city judge shall be a person licensed to practice law in the state of Tennessee and shall be elected by popular vote at the same time as provided for election of the governing body of such corporation, and in the same manner as provided for election to the board of education. Such judge shall be elected for a term of four (4) years. The city council shall by ordinance provide for the compensation of the city judge and other employees of the court, except that the judge shall be authorized to appoint, promote, suspend, remove or to take any other established personnel action with respect to the court clerk and other court employees consistent with the provisions of this Charter. The compensation fixed for the judge and court employees shall in no way be related to the amount of moneys collected by the court, and the compensation so fixed shall be in lieu of all fees, fines, penalties, forfeitures, or other moneys collected by the court.

A vacancy shall exist if the city judge resigns, dies, or has been continuously disabled for a period of three (3) months so as to prevent the city judge from discharging the duties of office; and such vacancy shall be filled by a majority vote of the city council, the appointee to serve until the next regular city or county election, whichever is first held, at which election a duly qualified person shall be elected to fill the unexpired term of the office.

Whenever the city judge finds it necessary to be absent from holding court, the city judge may designate in writing, to be filed with the clerk of the city court, a name of a special judge to hold court in the city judge's place and stead. The special judge shall be a person who has the qualifications of city judge and the special judge shall take the same oath and have the same authority as the regular city judge to hold court for the occasion.

Section 3. City court.

The council shall by ordinance establish and provide for the administration of a city court. The judge of the city court shall have jurisdiction in and over all cases for the violation of and all cases arising under the laws and ordinances of the city, and in all such cases the judge is authorized to tax in the bill of costs the same amounts and for the same items allowed in general session courts for similar work in state cases; provided the council may provide for smaller costs. Warrants, subpoenas, orders and other processes of the court shall be executed by police officers of the city, who for such purposes of the court shall have the same powers and authority of a sheriff in executing process of a circuit court. All fines, penalties, forfeitures, and money collected by the court, or the officers and employers thereof, shall be promptly turned over to the city treasury. The council shall require an audit of the accounts of the court at least annually. The records of the court shall be prescribed by ordinance. [As replaced by Ord. #16-08, May 2008, which was approved by the voters at the August 7, 2008 General Election]

Section 4. Removal of city judge.

The city judge shall be subject to removal from office for the same causes and in the same manner as provided for the removal of public officers by Sections 8-47-101 through 8-47-126 of Tennessee Code Annotated. In case of the absence or inability of the judge to serve, the city council may appoint and fix the compensation of an acting city judge who may be removed at any time without cause. Except as provided herein, officers and employees of the court are also subject to the provisions of Title 8 of the Tennessee Code Annotated.

Section 5. Advisory boards.

The council shall by ordinance create a personnel advisory board and may create by ordinance, resolution or motion such other long- or short-term advisory boards to the council and/or manager with respect to specific municipal functions as it may deem necessary, prescribing in each case the number, manner of appointment, length of term, and advisory duties of members of such boards who shall serve without compensation but may be reimbursed for necessary expenses incurred in official duties. An advisory board shall elect its own chair and any other officers from its membership. A council member may be appointed as a member of any advisory board, except the personnel advisory board. The council may direct the city manager to appoint a non-voting staff representative to any advisory board.

Section 6. Planning commission.

The council shall establish a planning commission and may within the framework of this Charter exercise authority in the fields of planning, zoning and subdivision control and related activities as provided by general laws of the state. At a time determined by city ordinance and consistent with applicable state law the planning commission shall submit to the city council a long-term capital improvement program with recommendations as to the priority of individual projects and the methods of financing them. The recommendations of the planning commission are to be considered by the council for the purpose of providing guidance to the city manager in preparing the annual budget as provided in Article V., Section 11. The members of the planning commission shall serve without compensation, but may be reimbursed for necessary expenses incurred in official duties.

Section 7. Intergovernmental agreements and contracts.

In addition to other powers granted in this Charter, the city council shall have power to contract and cooperate with any other municipality or other political subdivision of the state, or with an elective or appointive official thereof, or with any duly authorized agency of the federal or state government, for the planning, development, construction, acquisition, or operation of any public improvement, utility, or facility, for a common public service, for having the same individuals serve as officers or employees in more than one political subdivision and/or federal or state agency on a part-time basis in each, for the construction or operation of federally-owned utilities and other property on behalf of the federal government, for the acquisition by gift or by transfer or by purchase of federal property and if by purchase for the financing of its acquisition, for entering into contracts relating to acceptance of payments in lieu of taxes and/or state, federal, or other contributions, and for the furnishing of services to the federal government and its designees, outside the city limits as well as within; provided that the subject and purpose of any such contract or cooperative action made and entered into by the council shall be within the scope of the powers of the city.

Section 8. Arrangements and contracting powers.

The city council may exercise the powers conferred in Article III, Section 7, by ordinance setting out the terms agreed upon by the parties to such a contract or cooperative action. The parties to such a contract or cooperative action, or any of them, may acquire, by gift or purchase, or by the power of eminent domain exercised by one or more of the parties, the lands, buildings, and other property necessary or useful for the purposes of the contract or cooperative action, either within or without the corporate limits of one or more

of the contracting parties, and shall have the power to hold or acquire such lands as tenants in common. The city may provide for the financing of its share or portion of the cost or expenses of such a contract or cooperative action in the same manner and by the same procedure for the financing by the city of the subject and purposes of the contract or cooperative action as if acting alone and on its own behalf.

Such contract also may provide for the establishment and selection of a joint commission, officer, or officers to supervise, manage, and have charge of such joint service or project, and may provide for the powers and duties, terms of office, compensation, if any, and other provisions relating to the members of such joint commission, officer, or officers. Such contract may include and specify terms and provisions relative to the termination or cancellation of the contract or cooperative action by ordinance or resolution, and the notice, if any, to be given of such termination or cancellation; provided, that such cancellation or termination shall not relieve any party participating in such contract or cooperative action from any obligation or liability for its share of the cost or expense incurred prior to the effective date of any such cancellation or termination.

Section 9. Liability of officers.

All public officers acting under the authority of a contract or cooperative action under the provisions of Article III, Section 7 and Section 8, shall be deemed to be subject to the same liabilities to which they would have been subjected for actions occurring entirely within their own territorial limits.

Section 10. Deposits and disbursements of funds.

All money received pursuant to any such contract or cooperative action, under the provisions of Article III, Section 7 and Section 8, unless otherwise provided by law, shall be deposited in the appropriate fund or funds and disbursed in accordance with the provisions of such contract or cooperative action.

Section 11. Franchises.

No franchise or grant for the operation of a water, electric, telephone, steam, or public transportation or other utility which is not revocable at the will of the council shall be granted or become operative except by ordinance. Such ordinance shall become effective thirty (30) days after its adoption by the council unless twenty percent (20%) of the qualified electors of the city shall sign a petition and present it to the council during such thirty (30) day period requesting that the ordinance be referred to the electors, in which case it must receive the approval of a majority of the electors voting thereon at a municipal

election, and all renewals, extensions and amendments thereof shall be granted only in the same manner.

All public utility franchises granted under this Charter shall be subject to the following rights of the city, provided however, that this enumeration is not to be construed as being exclusive or as impairing council authority to impose any condition that may be in the municipal interest and within the power of the city to impose or require:

(a) To revoke for misuse, or non use, or for failure to comply with the provisions thereof;

(b) To require proper and adequate provision, extension, and maintenance of plant and service at the highest practicable standard of performance;

(c) To establish reasonable standards of service and prevent unjust discrimination in service or rates;

(d) To require uninterrupted service to the public in accordance with the terms of the franchise throughout the entire period thereof; and

(e) To impose such other regulations as may be determined by the council to be necessary to the health, safety, welfare, and accommodation of the public.

The council may institute such actions or proceedings as may be necessary to enforce a franchise and may revoke, cancel, or annul all franchises which have become inoperative, illegal, or void and not binding upon the city. Subject to state law, all public utility franchises shall prescribe the manner of fixing rates, fares, and charges, and the readjustments thereof at reasonable intervals at the discretion of the city. The values of the property of the utility used as a basis for fixing such rates, fares, and charges shall in no event include a value predicated upon the franchise, good will, or prospective profits.

Provided, however, that this section shall not be construed to repeal, abridge, modify or supersede any statute or law of the state pertaining to the public service commission or the regulation of public utilities which are subject to its jurisdiction; and the provisions of subdivisions (b), (c), and (d) of this section shall not apply to any public utility over which the said commission exercises regulatory authority.

Section 12. Official city newspaper.

The council by resolution shall designate a newspaper of general circulation in the city as the official city newspaper. The official notices and publications to be published in the official city newspaper shall also be published on the city"s web site. [As amended by referendum, November 11, 2010]

Section 13. City attorney.

The council shall appoint a city attorney together with such assistant city attorneys as the council shall determine are required. The city attorney shall be responsible for representing and defending the city in litigation in which the city is a party, shall be the prosecuting officer in the city court, shall attend all meetings of the council, shall advise the council, city manager and other officers and employees of the city concerning legal aspects of the city's affairs, shall approve as to form and legality all contracts, deeds, bonds, ordinances, resolutions, motions, and other official documents, and shall perform such other duties as may be prescribed by the council or city manager. The city attorney shall be an attorney licensed in the State of Tennessee.

Section 14. Periodic charter review.

Every eight years beginning in July 2007, the city council shall appoint a Charter Review Committee. The duty of the Committee shall be to review the Charter to ensure consistency with state law. The Charter Review Committee shall consist of seven members appointed by the city council. The city manager and city attorney shall serve as non-voting ex officio members. The Charter Review Committee shall conduct regular meetings, appoint one of its members as chair, keep minutes of its meetings, and submit its proposed amendments to the city council not later than 10 months from the date of official appointment. The city council shall consider the recommendations of the Charter Review Committee, and submit amendments that the council deems appropriate to a referendum of the voters in accord with the home rule provisions of the Tennessee Constitution.

ARTICLE IV

TAXATION AND ISSUANCE OF OBLIGATIONS

Section 1. Assessments.

The council by ordinance may provide for the assessment of property lying within the corporate limits by city assessing personnel, or may enter into any necessary agreements with the appropriate county officials for joint assessments by the city and county, or may elect to use county assessments. There shall be added to any county assessment any property omitted from such assessments.

Section 2. Equalization board – Establishment.

The council may by resolution establish an equalization board, and may appoint as members three (3) persons who are property owners and qualified voters of the city for a two (2) year term. Otherwise, the equalization board and its powers, duties, and procedures will be governed by state law.

Section 3. Levy, due date, and delinquencies.

Unless otherwise provided by ordinance, the schedule for ad valorem property tax levy, due date, and delinquencies shall be the same as provided by general law for counties, provided that the tax levy shall be set by council prior to the beginning of the new fiscal year. If no levy is made before the end of the fiscal year, the current levy shall be carried forward to the new fiscal year.

Section 4. Municipal debt.

The City of Oak Ridge may borrow money as provided by Tennessee General Law. Such authority is found within Title 9, Chapter 21, of the Tennessee Code, entitled Local Government Public Obligation Act.

ARTICLE V

CITY MANAGER–ADMINISTRATION OF CITY AFFAIRS

Section 1. Appointment, term and qualifications of city manager.

The council shall appoint a chief administrative officer of the city who shall be entitled city manager, and who shall serve at the pleasure of the council. The manager shall be selected on the basis of training, experience, and other administrative qualifications for the office and without regard to political or religious preference or place of residence at the time of appointment. No member of council shall be eligible for the position of manager within two (2) years after the expiration of his or her latest council term.

Section 2. Temporary absence of manager.

The council may designate a qualified administrative officer of the city to assume the duties and authority of the manager during periods of vacancy in the office, temporary absences or disability of the manager.

Section 3. Council-manager relationships.

The manager shall be responsible to the council for the administration of all units of the city government under his or her jurisdiction and for carrying out policies adopted by the council. Except for the purpose of inquiry, the council and its members shall deal with the administrative officers and employees solely through the manager. Neither the council nor any member thereof shall give orders to the manager's subordinates or otherwise interfere with managerial functions through such means as directing or requesting the appointment or removal of any of the manager's subordinates, or the making of particular purchases from, or contracts with, any specific organization. The office of any council member violating any provision of this section shall immediately become vacant upon the member's conviction in a court of competent jurisdiction.

Section 4. Duties and authority of manager.

The manager shall supervise the administrative affairs of the city. The manager shall be charged with the preservation of the public peace and health, the safety of persons and properties, and the enforcement of the laws, ordinances, and franchises, and the development and utilization of the city's resources. The manager shall make such reports and recommendations as may be deemed desirable and perform such other duties as may be prescribed by this Charter or required of him or her by ordinance or resolution of the council not inconsistent with this Charter. The manager shall have the right to take part

in the discussion of all matters coming before the council, but not the right to vote.

Section 5. Administrative organization.

Within the framework established by this Charter, the administrative organization of the city shall be organized into departments of general government, finance, and such other departments necessary to provide health, welfare, police, recreation, fire, library, public works, utilities and other municipal services as shall be provided in a plan of administrative organization to be developed by the city manager and submitted to the council for approval and adoption by ordinance. The council may by ordinance amend the plan of administrative organization only after receiving the written recommendations of the city manager. Administrative regulations governing the operations and relationships of departments, agencies, and offices within the administrative organization shall be prepared and issued by the city manager. The authority to prepare and issue departmental rules and regulations may be delegated to designated subordinates.

Section 6. City clerk.

The city manager shall appoint a city clerk, together with such deputy city clerks as may be authorized by ordinance. The city clerk shall be responsible for keeping and preserving the city seal and all records of the council; attending meetings of the council and keeping minutes at such meetings; preparing and certifying copies of official records in the office of the city clerk, for which fees may be prescribed by ordinance; and shall perform all other duties as are prescribed by the council or city manager.

Section 7. Assessment and collection of taxes.

The city manager or administrative personnel appointed by the manager shall make use of every method provided by general law to insure the collection of taxes due the city, and shall also be authorized to use and shall use, if necessary, the methods now available to cities organized under the uniform city manager-commission charter, TCA 6-22-110 through TCA 6-22-116.

Section 8. Administration of finances.

The city manager or an officer appointed by the manager shall have charge of the administration of the financial affairs of the city. There shall be maintained such accounting controls over the finances of the city, and such financial reports as may be required by this Charter, by ordinance, or by the

manager. The manager shall provide for the auditing, approving and payment of all claims against the city.

Section 9. Fiscal year.

The fiscal year of the city shall begin on the first day of July and shall end on the thirtieth day of June of the succeeding year, but another fiscal year may be fixed by ordinance for the entire city government or for any utility.

Section 10. Manager to prepare budget – Contents.

After one or more council meetings devoted to guidance to the city manager with respect to the budget to be submitted, as determined by the council, on or before a date fixed by the council, the manager shall submit to the council a proposed budget for the next fiscal year. The budget shall present a complete financial plan for the ensuing year, including at least the following information:

(a) Detailed estimates of all proposed expenditures for each department, board, officer or other agency of the city, showing in addition the expenditures for corresponding items for the last preceding fiscal year, appropriations and anticipated expenditures for the current fiscal year, and reasons for recommended departures from the current expenditures pattern.

(b) Statements of the bonded and other indebtedness of the city, including the debt redemption and interest requirements, the debt authorized and unissued, and the condition of the sinking funds.

(c) Detailed estimates of all anticipated revenues of the city from all sources including current and delinquent taxes, non tax revenues and proceeds from the sale of any bonds, with a comparative statement of the amounts received by the city from each of such sources for the last preceding fiscal year, the current fiscal year, and the coming fiscal year.

(d) A statement of the estimated balance or deficit, as of the end of the current fiscal year.

(e) Such other supporting schedules as the council may request, or are otherwise required by law.

Section 11. Capital budget program.

As a part of the proposed annual budget, the city manager shall include a statement of pending capital projects and proposed new capital projects, relating the respective amounts proposed to be raised therefor by appropriations in the budget and the respective amounts, if any, proposed to be raised therefor by the issuance of bonds during the fiscal year. Such pending and proposed capital projects shall be based upon the guidance of council as expressed in the

guidance meeting(s) carried out under Article V, Section 10 of this Charter. Council shall use as one basis of its guidance to the manager the program of capital projects prepared annually by the planning commission. The manager shall provide the council written comments on the planning commission program at the time of the first guidance meeting.

Section 12. Public hearing on budget – Inspection – Distribution.

A public hearing on the budget shall be held before its final adoption by the council, at such time and place as the council shall direct, and notice of such public hearing shall be published ten (10) days in advance of the date of the hearing. All persons present shall be given a reasonable opportunity to be heard for or against the estimates of any item thereof. The budget and budget message and all supporting schedules shall be a public record in the office of the city clerk open to public inspection by anyone. The city manager shall cause sufficient copies of the budget and budget message to be prepared for distribution to interested persons at least ten (10) days before the hearing.

Section 13. Adoption of budget – Appropriation ordinance.

Before the beginning of the next fiscal year, the council shall adopt an appropriation ordinance, based on the city manager's budget with such modifications as the council considers necessary or desirable, provided that modifications in the school budget as submitted by the board of education shall be subject to the limitations of Article VI, Section 13, of this Charter. Appropriations need not be in more detail than a lump sum for each fund. The council shall not make any appropriations in excess of estimated revenues, except to provide for an actual emergency threatening the health, property or lives of the inhabitants of the city and declared by a unanimous vote of all members of the council present, when there is a quorum. Provided, however, that if for any reason an appropriation ordinance is not adopted prior to the end of the fiscal year, the appropriations for the current fiscal year shall be carried forward for the new fiscal year, until the adoption of the new appropriation ordinance. The appropriation ordinance insofar as it relates to the appropriation for schools shall be further subject to the provisions of Article VI, Section 14, of this Charter.

Section 14. Amendments to appropriation ordinance.

Amendments may be made to the original appropriation at any time during a current fiscal year after a public hearing before the council on ten (10) days notice published once in the official city newspaper, provided that increased appropriations may be made only after the city manager has certified

in writing that sufficient amount of unappropriated revenue will be available, except for emergency appropriations as provided above.

Section 15. Unexpended appropriation to lapse.

Any portion of an annual appropriation remaining unexpended and unencumbered at the close of a fiscal year shall lapse and be credited to the general fund, except that any balance remaining in any other fund at the end of a fiscal year may remain to the credit of that fund and be subject to further appropriation.

Section 16. Budget control.

At the beginning of each quarterly period during the fiscal year, and more often if required by the council, the manager shall submit to the council data showing the relations between the estimated and actual revenues and expenditures to date; and if it shall appear that the revenues are less than anticipated, the council may reduce the appropriations, as prescribed in Article V, Section 14, except amounts required for debt and interest charges, and with the further exception to such a degree as may be necessary to keep expenditures within the receipts. The manager may provide for monthly or quarterly allotments of appropriations to all departments, agencies or activities within the manager's jurisdiction under such rules as he or she shall prescribe, and make transfers between departments, agencies, or activities within each fund, and when authorized by the city council, from one fund to another, provided that any transfer of moneys from the city school fund to any other fund shall be made only with the concurrence of the board of education.

A summary balance sheet, including a listing of all fund balances exceeding $100,000.00, a summary quarterly city income and expense statement, and a statement of the number of city employees and full-time equivalent city employees shall be placed quarterly on the city's website. A comparison between actual and previously estimated fiscal year revenues to date by source and expenses to date by department shall be placed semiannually in the local library and posted on the city's website.

Section 17. Purchasing.

Except for purchases made by the school system under Article VI, Section 15, the city manager shall be responsible for all city purchasing, but may delegate that power and duty to any subordinate. However, the city council shall by ordinance set a dollar limitation on purchases, beyond which purchases must be made by competitive bidding, and bids awarded to the lowest and best responsible bidder. Such purchases must be approved by the city council, and within the limits prescribed by state law, the city shall have the right to reject

any and all bids. But where the city manager makes a written recommendation to the city council that it is clearly to the advantage of the city to make purchases by noncompetitive bidding, the council may, by unanimous resolution of those present, authorize the city manager to make the purchase in question without competitive bidding. Agreements entered into by the city including construction work or professional services involving the expenditure of an amount exceeding the limit established by ordinance must be evidenced by a written contract. The council may also authorize city departments or other city agencies to make public improvements, and to perform other city work, without competitive bidding.

The city council shall have the authority to adopt other ordinances governing purchases that are not inconsistent with this charter or any state law that applies to the city"s purchases. [As replaced by Ord. #17-08, May 2008, which was approved by the voters at the August 7, 2008 General Election; and replaced by referendum, November 11, 2010]

Section 18. Management of city property and equipment.

The management of all city property and equipment except school property and equipment shall be the responsibility of the city manager who shall prepare for the approval of the council regulations governing the acquisition, custody, use and disposal of all such property and equipment. Such regulations shall provide for a regular inventory, appraisal and marking of all such property and shall require that the disposal of any city property and equipment shall be by sale, with sealed bids taken or public auction held on such property and equipment other than real estate valued at more than an amount established by ordinance and that such sales shall be subject to the approval of the city council.

The management of all city real property, except school real property, shall be the responsibility of the city manager. The council may delegate by ordinance to the city's Industrial Development Board or any other city board or officer the authority to manage and sell council-designated city lands. Except for those lands where such authority to sell has been delegated by the council, all sales of city lands whose value exceeds a limit established by ordinance shall be subject to the approval of the city council.

No real estate zoned as Greenbelt and belonging to the city shall be sold, offered for sale, or offered for lease without a prior public hearing before city council. This public hearing shall be announced at least two (2) weeks before the date of the hearing by causing to be published in the official newspaper of the city a notice of such hearing which shall include a description of the property to be sold and the reasons for the proposed sale. No action to sell the property in question shall be taken until thirty (30) days after the public hearing.

Section 19. Annual audit.

At the end of each fiscal year an audit shall be made of the accounts and funds of the city, covering the operations of the past fiscal year, by a certified public accountant selected by the council. The council may employ certified public accountants to audit all or any of its accounts and funds at the time it takes office or at any time it may deem expedient to assure correctness thereof.

Section 20. Fees paid to city.

All fees received in handling city business by any officer or employee shall belong to the city and shall be paid promptly into the city treasury, except fees received by school officers and employees which shall be paid into the city school fund.

Section 21. Depository for city funds.

The council shall designate a commercial bank or banks as depository or depositories for city funds and shall provide for the regular deposit of all city moneys. The Council shall require any city funds deposited with a financial institution to be secured by collateral in the same manner and under the same conditions as state deposits, under Title 9, Chapter 4, parts 1 and 4, or as provided in a collateral pool created under Title 9, Chapter 4.

Section 22. Appointment, removal and supervision of personnel under the city manager.

The manager shall have the power to appoint, promote, suspend, transfer, and remove, or to take any other established personnel action consistent with the provisions of Article V, Sections 23 through 33, inclusive, of this Charter with regard to all administrative officers and employees of the city responsible to him or her; or the manager may authorize the head of a department or office to take such actions regarding their subordinates. The manager shall appoint such heads of administrative offices, organization units, and activities as deemed necessary. The manager may combine any such administrative offices herein or otherwise established, or may delegate parts of the duties of the manager's office to designated subordinates.

Section 23. General personnel policy.

It shall be the policy of the city to provide equal employment opportunity to all employees and applicants for employment and to recruit, hire and promote for all job classifications without regard to race, religion, creed, color, sex, age, national origin or handicapped status except where age and handicapped status

are bona fide occupational qualifications. It shall further be the policy of the city that all personnel actions such as compensation, benefits, transfers, layoffs, return from layoffs, training, education, tuition assistance and social and recreational programs will be administered without regard to race, religion, creed, color, sex, age, national origin, handicapped status or sexual orientation. To this end the manager shall appoint an Affirmative Action Officer who shall be responsible for preparation and implementation of the city's Affirmative Action Plan. The manager shall make an annual report to the council on the city's progress towards achieving the goals of the Affirmative Action Plan.

The policy of the city shall be to employ those persons fully qualified to carry out the functions of the city. To this end the council shall, by ordinance, establish a merit system providing for the appointment and promotion of city officers and employees on the basis of competence and fitness. All officers and employees shall be included in such merit system except:

(a) Council members.
(b) Members of boards who are not city employees.
(c) The manager and the manager's secretary.
(d) Department heads.
(e) Organizations and their employees and other persons who are engaged by the city on a contractual basis.

[As amended by referendum, November 11, 2010]

Section 24. Manager to administer merit system.

The manager shall be responsible for the administration of the merit system. The manager shall, with the advice of the personnel advisory board, develop, maintain, and apply suitable provisions for the classification of positions and for the recruitment, compensation, training, promotions and disciplinary and related aspects of personnel management. The manager shall develop and revise as necessary a comprehensive pay plan and personnel rules setting forth employment conditions. The personnel advisory board shall review such plans and rules and proposed revisions thereof, and submit them to the council with recommendations for adoption.

Section 25. Investigation of complaints by personnel advisory board–Findings–Review.

The personnel advisory board shall investigate complaints made to it in writing by any officer or employee who is included in the merit system and who is suspended or removed from his or her position or otherwise adversely affected by a personnel action. If in the opinion of the board, the procedures established for such personnel action were not complied with, the board shall make decisions that shall be binding. In all other cases, the board shall report its findings and recommendations, which shall be advisory in nature, in writing to

the manager, and the decision of the manager shall be final. Provided, however, that in all such cases any such officer or employee shall have the right to common law certiorari to review the action of the board and the manager.

Section 26. Personnel advisory board to assist manager.

The personnel advisory board shall assist the manager in other personnel matters as may be set forth by ordinance and may investigate and make recommendations and reports to the council and manager on improvements in conditions of municipal employment and on significant violations of the principles of sound personnel administration.

Section 27. Compensation of officers and employees.

Except as otherwise provided in this Charter, the compensation of all officers and employees of the city shall be fixed by the manager within the limits of budget appropriations and in accordance with a comprehensive pay plan adopted by the council.

Section 28. Salary or wages to be only compensation–Disposition of fees and commissions.

The compensation of officers and employees as fixed or otherwise provided for by this Charter shall be in full payment for all official services of such officers or employees, and shall be in lieu of any and all fees, commissions, and other compensation which may be receivable by such officers in performance of the duties of their offices; such fees, commissions and compensation shall belong to the city, be collected and accounted for by such officers, and be paid over to the city.

Section 29. Employee welfare benefits.

The council shall provide for the retirement of the city's nonelective officers and employees and may make available to them any group, life, hospital, health, or accident insurance, either independently of, or as a supplement to, any retirement or other employee welfare benefits otherwise provided by law.

Section 30. Separations and resignations.

The council shall prescribe by ordinance appropriate procedures with respect to resignations of officers and employees and with respect to the orderly transfer of records, assets, and other effects in the custody of such officers and employees to their successors or supervisors.

Section 31. Surety bonds of officers and employees.

All city officers or employees receiving, disbursing or responsible for city funds shall be bonded. The council may require any officer or employee to give a bond, approved by and in such amount as the council shall determine. All such bonds shall be corporate surety bonds, and the premiums thereon shall be paid by the city. No such bond shall be issued for a term exceeding four (4) years. No bond required by this section shall be renewed upon its expiration or in the event of the reappointment of any officer or employee to a position for which a bond is required, but a new bond shall be furnished. The resignation, removal, or discharge of any officer or employee of the city shall not, nor shall the election or appointment of another to his or her office or employment, exonerate such officer or employee or his or her sureties from liability.

Section 32. City Ethics Policy.

The City Council shall establish an ethics policy consistent with state law. [As replaced by referendum, November 11, 2010]

Section 33. Political activity prohibited.

No city employee shall engage in political activity, support or opposition to any candidate, party or measure in any election when on duty or off duty while in uniform or acting in employee's official capacity. When off duty and acting as a private citizen, no employee shall be prohibited from engaging in political activity or denied the right to refrain from engaging in such activity. No employee of the city shall serve on the city council.

Section 34. Financial records of utilities.

Separate financial and accounting records shall be maintained for each utility in accordance with accepted principles of utility accounting and as may be required by the city council, without impairing the authority of the city to manage and operate the utilities with the same personnel and equipment.

Section 35. Disposal of utility plants and property.

The city shall not sell, exchange, lease, or in any way alienate or dispose of the property, easements, or other equipment, privileges or assets which are essential parts of any utility which it may acquire, unless and except the proposition for such purpose shall first have been submitted and approved by a majority vote of the electors voting thereon at a municipal election in the manner provided in this Charter. All contracts, negotiations, licenses, grants, leases, or other forms of transfer in violation of this provision shall be void and

of no effect as against the city. The provisions of this section shall not, however, be interpreted to preclude the sale, exchange, or other disposal to the advantage of the city, of parts of a utility's property and assets which are not essential to continued effective utility service and the disposal of which will not prejudice municipal interests.

ARTICLE VI

PUBLIC SCHOOLS

Section 1. Board of education.

The control and management of the schools of the city shall be the responsibility of a board of education which shall consist of five (5) qualified voters of the city, meeting the requirements of Article I, Section 5. The members of the board of education are to be elected at large and shall hold office for a term of four (4) years.

Section 2. Nomination and election of board members.

The members of the board of education shall be nominated by petition as provided in Article I, Section 6 and elected at the same time and places as provided in this Charter for elections of the members of the city council. Eligibility of voters shall be the same as Article I, Section 3. Each candidate to the board or any person acting in the candidate's behalf shall be subject to Article I, Section 8. After certification of the election by the county election commission, persons elected to the board of education shall take office upon taking the oath of office as provided in Article I, Section 10. The members of the board shall be subject to the provisions for recall as provided in Article I, Section 12 of this Charter.

Section 3. Election of board of education – Term of office.

Three (3) board members shall be elected for a term of four (4) years in the regular city election of June 2005, and two (2) board members shall be elected in the regular city election of June 2007 for a term of four (4) years. Commencing with the next following regular city election and at all subsequent regular city elections thereafter, the board of education seats then becoming vacant shall be filled by board members each elected for four (4) year terms.

Section 4. Board of education chair – Vice-chair.

At the first meeting after each regular biennial election, the board shall elect a chair and vice-chair. The chair shall preside at the meetings of the board and may vote as any other member but shall have no power of veto. The chair shall perform the duties imposed by the rules of the board. The vice-chair shall perform the duties of the chair in case of the chair's absence or inability to act. In the event of a permanent vacancy in the office of chair a new chair shall be elected.

Section 5. Powers and duties of board of education.

The board of education shall have the following powers and duties:

(a) To appoint and remove a superintendent of schools as provided in Article VI, Section 9.

(b) To establish schools, determine the attendance areas of the various schools, and determine the policies and programs of the city school systems, subject to the availability of school funds.

(c) To determine the number of teachers and other employees in the city school system subject to availability of school funds, after considering the written recommendations of the superintendent of schools.

(d) To review, revise and approve budget estimates prepared by the superintendent of schools and to submit such estimates to the city manager, in accord with budget control procedures described in Article III, Section 6 and in Article V, Sections 10, 11 and 16.

(e) To initiate, review, revise and approve plans for the erection or improvement of buildings and facilities to be used for educational purposes and to transmit copies of all such plans, which bear on the long range development of the schools to the city planning commission for incorporation as part of the capital improvement program as described in Article VI, Section 13.

(f) To purchase or otherwise acquire land for school buildings, playgrounds and other purposes connected with the city school system; to purchase, construct, operate and regulate the use of all buildings, required for purposes of the city school system; and to do any and all other acts necessary to establish, maintain, and operate a complete public educational system within the city, including adult education, subject to the availability of school funds.

(g) To review, revise and act upon any recommendation by the superintendent of schools relating to the operation and maintenance of school buildings.

(h) To cooperate with the city council, city manager and other officials of the city government, and with the officials of other governmental jurisdictions, in programs leading to improvements and economies in the public services provided the residents and taxpayers.

(i) To make any investigation which the board may consider desirable concerning administration of the city school system.

(j) To exercise any and all powers not specifically stated in Articles I through VI of this Charter but given to boards of education by general law.

Section 6. Rules of procedure and meetings.

The board shall adopt rules governing the conduct of its business and meetings; provided that regular meetings shall be held at least once a month, at a time and date to be determined by the board. The board shall provide by resolution for the time of day and place of all its meetings. A majority of the

board shall constitute a quorum and the affirmative vote of at least three (3) members shall be required to approve any action. A special meeting shall be called by the chair, by any two (2) members of the board, or by the superintendent of schools, by a written notice delivered at least twenty-four (24) hours in advance of the meeting either personally or left at the usual place of residence of the members and superintendent. Such notice shall set forth the character of business to be discussed at the meeting, and no other business shall be considered at such meeting. All board meetings shall be open to the public and citizens shall have a reasonable opportunity to be heard. The board shall exercise its powers only at public meetings.

Section 7. Vacancies on board.

A vacancy shall exist if a board member resigns, dies, moves from the city, has been continuously disabled for a period of three (3) months so as to prevent the member from discharging the duties of the office, accepts any state, county, or other municipal office or position of employment with the city, except as a notary public or member of the national guard or reserves, or is convicted of malfeasance or misfeasance in office, a felony, a violation of this Charter, or a violation of the election laws of the state. A vacancy shall be filled within thirty (30) days by an affirmative vote of a majority of the remaining board members, the appointee to serve until the next regular city, county, or state election at which time a successor shall be elected to fill the unexpired term in the manner specified in Article I, Section 11, except that the chair of the board shall be read for mayor. If a tie vote by the board to fill a vacancy is unbroken for thirty (30) days, the chair of the board shall appoint a qualified person to fill the vacancy. No appointment to fill the vacancy shall be made within sixty (60) days prior to any regular city, county, or state election. The candidates in such an election to fill the vacancy shall be nominated by petition as provided in Article VI, Section 2.

Section 8. Compensation of board members.

Members of the board of education shall be compensated at the rate of one hundred and fifty dollars ($150.00) per month. The chairperson shall receive one hundred dollars ($100.00) per month in addition to compensation as a board member. All board members may be reimbursed for actual and necessary expenses incurred in the conduct of their duties, provided these expenses are approved by the board at a regular meeting.

Section 9. Superintendent of schools–Board secretary.

The board of education shall appoint a superintendent of schools who shall be the administrative head of the city school system. The superintendent

shall be subject only to the board of education and all orders of the board relating to the management of the schools shall be given through him or her. Except for the purpose of inquiry the board and its members shall deal with administrative officers, principals, teachers and other employees solely through the superintendent. Neither the board nor any member thereof shall give orders to the superintendent's subordinates or otherwise interfere with the superintendent's functions through such means as the making of particular purchases from, or contracts with any specific individual or organization. The office of any board member violating any provision of this section shall immediately become vacant upon conviction in a court of competent jurisdiction.

The board of education shall fix the superintendent's salary. The superintendent shall serve at the pleasure of the board as provided by the contract of employment. The superintendent shall have the right to take part in the discussion of all matters coming before the board, but not the right to vote. The superintendent, or other employee designated by the board on the recommendation of the superintendent, shall serve as secretary to the board.

Section 10. Powers and duties of superintendent of schools.

The superintendent of schools shall have the following powers and duties:

(a) To manage and direct the city school system in accordance with the policies and programs of the board of education.

(b) To appoint, promote, transfer, retire, and remove and take any other established personnel action with regard to all teachers, and other employees in the city school system consistent with the provisions of this charter, policies and programs adopted by the board of education and the general laws of the state.

(c) To prescribe, control and correlate the courses of study, textbooks, and educational apparatus and equipment, consistent with the school laws of the state, and the policies and programs adopted by the board of education.

(d) To prepare and issue rules and regulations for the administration and execution of the policies, plans, and programs adopted by the board.

(e) To prepare budgets for the city school system for approval by the board of education and submission to the city manager for final consideration by the city council.

(f) To make periodic allotments of funds appropriated for city school purposes.

(g) To make purchases and contracts subject to the limitations of this Charter and such policies as may be prescribed by the board of education.

(h) To prepare for approval by the board of education salary schedules for teachers and other employees of the city school system as provided in Article VI, Section 11.

(i) To prepare, for approval by the board of education, plans for constructing, enlarging or improving school buildings and other school facilities.

(j) To exercise such other powers and to perform such other duties not inconsistent with this Charter or other general laws, as may be prescribed by the board of education.

Section 11. Officers and employees of school system.

All of the officers and employees of the city school system shall be subject to the provisions of Article V, Sections 27-33, inclusive, of this Charter, with the school system standing in the stead of the city, with the board of education in the stead of the city council, board members in the stead of council members, board chair in the stead of the mayor, and the superintendent of schools in the stead of the city manager and the city clerk, and that on actions taken under this Charter, the rules and regulations of the board shall have the same force and effect as an ordinance of the city council.

Further, the board of education shall establish and appoint a school personnel advisory board whose functions and duties shall be the same for officers and employees of the school system as those of the personnel advisory board for officers and employees of the city, except that its functions shall not extend to tenured personnel of the school system. No board of education member shall serve on this advisory board.

Section 12. Financial management.

All school moneys appropriated by the city council, all state and county funds received for the city school system, and all other moneys, fees, revenues or income which are received by the city school system or which heretofore or hereafter are granted or permitted to the city school system shall be deposited in a city school fund to be withdrawn only upon the order of the board of education provided that a full estimate thereof shall have been summarized in each school budget and provided further that those portions of such funds derived from city appropriation ordinances shall be subject to the provisions of Article V, Sections 14-16. The board of education shall establish such school funds as are required by general law or as it considers necessary for the operation of the school system. At the end of each fiscal year an audit shall be made of the accounts and funds of the school system covering the operations of the last fiscal year by certified public accountants selected by the board. The board of education may employ certified accountants to audit all or any of the school funds and accounts at any time it may deem expedient to assure the correctness thereof. Article V, Section 21, shall apply with the board of education standing in the stead of council.

Section 13. School budget.

The city school budget submitted by the board of education through the city manager to the city council shall include estimates of all school revenues as well as estimates of expenditures necessary for the operation of the school system for the next fiscal year period. Neither the city manager nor the city council shall have any authority to modify or delete any item of the school estimates and the council shall have the power to modify only the total amount of the school budget, except that in no event shall a reduction in school budget exceed the total sum requested by the board of education from current city tax revenues. Such budget estimates shall not include any requests for the purchase of land or the purchase, construction, reconstruction, or major alteration of any building for school purposes. Requests for such improvements shall be transmitted to the planning commission for review and incorporation into the capital improvement program before November 1 prior to the next fiscal year.

A summary balance sheet, including a listing of all fund balances exceeding $100,000.00, a summary quarterly schools income and expense statement and a statement of the number of schools employees shall be placed quarterly on the city's web site.

Section 14. Notice of appropriation.

The adoption by the city council of an appropriation ordinance for the next fiscal year, or the allowance of a continuation of the appropriation for the last fiscal year, shall serve as notice to the board of education of the total amount of the school appropriation for the next fiscal year period.

Section 15. Purchases and contracts.

All materials, supplies and equipment shall be purchased by the superintendent of schools in accordance with procedures approved by the board of education, except that centralized purchasing with the city administration may be utilized where it is mutually agreed upon by the council and board or their delegated representatives. The board of education or superintendent of schools, in making purchases and contracts, shall be subject to the provisions of this Charter relating to purchases and contracts by the city council and city manager, with the board of education standing in the stead of the council and the superintendent of schools standing in the stead of the city manager. No purchase, expenditure or contract shall be made in excess of available school funds.

Section 16. Disbursements.

All disbursements of moneys from the city school funds or other established school funds for the city school system shall be made by checks countersigned by the superintendent of schools or by other school personnel designated by the board of education upon recommendation of the superintendent.

Section 17. Transfer of city schools to county.

Any governing body action to transfer the city school system or part thereof to a county, or to consolidate school systems with a county, may be adopted after considering the written recommendation of the city board of education. Such action shall respect the equity that citizens of Anderson and Roane Counties each hold in the physical and intellectual property of the city school system. Any such action to transfer or consolidate shall be subject to subsequent approval by a majority of the qualified voters voting in a city referendum held for that purpose.

Section 18. Agreement with county to take over county schools.

The city council, after considering the written recommendations of the board of education, may enter into an agreement with the county for the city school system to take over ownership, management and control of that part of the county school system within the city, including land, buildings and all other school property, equipment, and facilities.

Section 19. Resolution of conflicts with state laws.

Where any provision of this article conflicts with the provisions of the Tennessee Educational Improvement Act of 1992, as amended, the provisions of the Tennessee Educational Improvement Act of 1992, as amended, shall prevail. [As added by Ord. #18-08, May 2008, which was approved by the voters at the August 7, 2008 General Election]

SEWER OVERFLOW RESPONSE PLAN#

CITY OF OAK RIDGE#

PUBLIC WORKS DEPARTMENT

APPROVED BY EPA APRIL 2011

Table of Contents

INTRODUCTION 3

1.0 Definitions 4

2.0 Process Overview 7

2.1 Scope and Summary 7

2.2 Assumptions and Limitations 8

3.0 System and Organizational Structures 8

3.1 City of Oak Ridge Wastewater System 9

3.2 City of Oak Ridge Operational and Functional Structure 9

3.3 Equipment and Tools 9

3.4 SORP Procedures 9

3.4.1 SORP-Sewer Blockage or Backup into Basement 11

3.4.2 SORP-Overflowing Manhole Due to Surcharged Sewer Main 12

3.4.3 SORP-Cavities and Depressions in Streets and Lawns 13

3.4.4 SORP-Sewage Force Main Break 14

3.4.5 SORP-Sewer Main Breaks/Collapse 16

3.4.6 SORP-Air Release and Vacuum Valve Failure 18

3.4.7 SORP-Wastewater Pump Station Alarms General Response Plan 18

3.4.8 SORP-Pump Station Failure due to Secondary Power Failure 22

3.4.9 SORP- Pump Station Failure inside Valve Pit, Pump or Valve Failure 23

4.0 Sanitary Sewer Overflow (SSO) Discovery, Recording and Reporting Process 24

4.1 SSO Evaluation and Review 25

4.2 Reporting Process 25

4.3 Other Public Notifications 26

4.3.1 Contact Information 26

4.4 Likely Overflow Sites 27

5.0 Training 31

5.1 Review and Update SORP 32

APPENDIX A--ORGANIZATIONAL CHARTS 33

APPENDIX B--EQUIPMENT AND TOOLS 37

APPENDIX C--TWO SSO FORMS 40

APPENDIX D--PHOTOS-ESTIMATING SSO's FROM MANHOLES 43

THE CITY OF OAK RIDGE TENNESSEE
SANITARY SEWER OVERFLOW RESPONSE PLAN

INTRODUCTION

A Sewer Overflow Response Plan (SORP) is an outline of procedures necessary to minimize the adverse effects of a sanitary sewer overflow (SSO). Having a plan in place that a response team can follow is an absolute necessity to minimize damage to the environment and to protect the safety, health, and property of those affected.

This SORP is an emergency plan to ensure that:

- The City of Oak Ridge operating management is aware of SSO's
- There is a plan for appropriate, rapid response
- There is timely notification to appropriate regulatory authorities (Anderson Co. Health Dept. doesn't require notification at this time, per Gabe Davis on 4-1-11)
- That personnel are trained, know and follow the plan
- Emergency operations are provided

The goal of the SORP is to document the City of Oak Ridge procedures for responding to all SSO's and ensure a consistent response. These protocols are intended to address all types of events and ensure that every effort is made to reduce the adverse impact to the environment and protect the public from any potential health hazard associated with an overflow or backup. The City of Oak Ridge will use its discretion and best professional judgment to evaluate each event and choose the appropriate remediation tools.

Reasons for SSO's

Reasons for sewer overflows can be from any number of conditions including collapsed or broken sewer lines, obstruction in the sewer pipe and overloading the hydraulic capacity from inflow or infiltration, particularly during heavy rains or prolonged rainy seasons.

1.0 Definitions

Basin: Basins are small portions of the sanitary sewer system separated by boundaries of natural topography or system configurations. Separating the system into basins allows the City of Oak Ridge to better identify and monitor system performance in these small basins.

Building Back up: A building backup means wastewater backs up into buildings that are caused by blockages or flow conditions in the City of Oak Ridge waste water collection system other than a private service lateral. A wastewater backup into a building that is caused by a blockage or other malfunctions in a private service lateral is not a Building Backup.

Bypass: Shall have the meaning set forth at 40 C.F.R.-122.41 (m).

CCTV: Closed circuit television used to visually inspect the internal conditions of pipes and sub-surface structures.

Cleanout: A cleanout is a vertical pipe with a removable cap extending from a private service lateral to the surface of the ground. It is used for access to the private service lateral for inspection and maintenance.

Combination Cleaners: Combination Cleaners are mechanical equipment with flushing and suction capabilities. This equipment is used to clean or collect wastewater and related debris from the sanitary sewer system.

Discharges: A discharge is any release of untreated wastewater (including that combined with rainfall induced by infiltration and inflow, or I&I) from a sanitary sewer system.

Dry Weather SSO: A discharge of untreated sewage from a sanitary sewage system due to flow restrictions or system disruptions.

EPA: Environmental Protection Agency

First Responder: Typically a designated sewer maintenance employee or qualified City of Oak Ridge employee who assumes initial responsibility for response to a SSO event.

Force Main: A pressurized line that conveys wastewater from a pump station.

Gravity Line: Gravity or main sewer collection lines represent the largest portion of the City of Oak Ridge wastewater collection system. Elevation differences are used to transport wastewater between points, normally manholes.

I&I: Inflow and Infiltration, or extraneous surface or ground water that enters the sanitary sewer collection system.

Impacted Areas: Impacted areas are sites where sanitary sewage has collected or areas that have been affected as a result of a discharge from the sewage system.

Infiltration: Infiltration is the introduction of groundwater into a sanitary sewer system through cracks, pipe joints, manholes or other system leaks.

Inflow: Inflow is the introduction of extraneous water into a sanitary sewer system by direct or inadvertent connections with storm water infrastructure such as gutters and roof drains, uncapped cleanouts and cross-connections with storm drains.

Lift or Pump Station: A lift or pump station is a mechanical method of conveying wastewater to higher elevations.

Manhole or Junction Box: A manhole or junction box provides a connection point for gravity sewer collection lines, private service laterals or force mains, as well as an access point for maintenance and repair activities.

Public System: Public system refers to the City of Oak Ridge sanitary sewer system, excluding private service laterals and connections with private systems.

Private Service Laterals: That portion of a sanitary sewer conveyance pipe, including that portion in the public right-of-way, that extends from the wastewater main to the single-family, multi-family, apartments, or other dwelling unit or commercial or industrial structures to which wastewater service is or has been provided.

Sanitary Sewer System: A sanitary sewer system collects, conveys and treats residential, commercial and industrial wastewater through a complex network of infrastructure that includes these components:

- Private service laterals
- Gravity or main lines
- Manholes or junction boxes
- Sewer lift or pump stations
- Force mains
- Treatment plants

Supervisory Control and Data Acquisition System (SCADA): SCADA is automated sensory control equipment that monitors the operation of the pump station. The SCADA system will convey alarms when predetermined conditions occur. Monitoring parameters include but are not limited to power failures, high wet well levels and pump failures that could potentially cause overflows.

SORP: The City of Oak Ridge Sewer Overflow Response Plan provides structured guidance, including a range of field activities to choose from for a uniform response to overflows.

Sanitary Sewer Overflows (SSO): SSO shall mean an overflow, spill or release of wastewater from the City of Oak Ridge wastewater collection system, including:

(a) All unpermitted discharges or (b) overflows, spills, or releases of wastewater that may not have reached waters of the United States or the State and (c) all building backups.

TDEC: Tennessee Department of Environment and Conservation.

Unpermitted Discharges: A discharge of pollutants that reach waters of the United States or the State from the sewer system (including constructed overflows) from WWTP's through a point source not specified in an NPDES Permit or from WWTP's which constitute a prohibited bypass.

Wastewater Collection and Transmission System: The municipal wastewater collection and transmission system, including all pipes, force mains, gravity sewer lines, lift stations, pump stations, manholes, and appurtenances there to, which are owned or operated by the City of Oak Ridge.

Water of the State: Waters of the State shall have the same meaning as "Waters" defined at TCA 69-3-103 (33).

Wastewater Treatment Plant: Devices or systems used in the storage, treatment, recycling, and reclamation of municipal wastewater. This includes all facilities owned, managed, operated, and maintained by the City of Oak Ridge.

Wet Weather SSO: A discharge of untreated sewage from a sanitary sewer system due to excessive flows during rain events or elevated ground and surface water conditions.

2.0 Process Overview

The City of Oak Ridge continues to work to provide an efficiently designed, maintained and operated sanitary sewer system to safely collect and convey sewage to the wastewater treatment plant for appropriate treatment and discharge.

A SSO occurs when sewage escapes from a sanitary sewer system anywhere other than at an approved discharge point. A SSO can result from flow restrictions or system disruptions or it may also result from excessive flows caused by elevated ground water and surface water during rain events.

The City of Oak Ridge developed this SORP to reduce the impact of SSO's relating to customers or the environment and to comply with regulatory requirements. It provides structured guidance for response to overflows and includes a range of appropriate and effective field activities to choose from to meet the needs of each individual situation. The operating staff must use its discretion and best professional judgment to evaluate each event and choose the appropriate method for remediation.

The response to a SSO begins when a customer, City of Oak Ridge employee, telemetry system or outside party reports a possible overflow.

2.1 Scope and Summary

The SORP consists of procedures to help mitigate the adverse impact of an SSO to the environment. The process begins with a report of a possible SSO into the City of Oak Ridge management system. The notification initiates a series of protocols to confirm the report, reduce the impact on the environment, report the occurrence to the appropriate individuals and agencies, and track the occurrence to help prevent future events.

Key Components of the City of Oak Ridge SORP

- Determine if the cause of the SSO falls under the City of Oak Ridge area of responsibility or is a private issue
- Contain the overflow to reduce any further negative impact
- Resolve system disruption
- Advise the customer if the overflow is due to a problem on their property or is the City of Oak Ridge's responsibility
- Implement appropriate notification procedures
- Track SSO occurrences

- Develop and implement system improvements

2.2 Assumptions and Limitations

The City of Oak Ridge initiates the SORP promptly after notification of a possible SSO from a customer, passerby, emergency agency or other individual or entity.

The process to be implemented depends on these factors:

- City of Oak Ridge responsibility
- Private customer issue
- Location of SSO
- Environmental impact

A building backup or overflow caused by a failure in the customer's private system is referred to internally as "Customer Responsibility". If the City of Oak Ridge identifies the problem to be on the private portion of the system, the customer is notified. The customer is responsible for any required repair or clean- up of their own facilities.

A building back up that is caused by a failure in the City's wastewater collection system is referred to as "City Responsibility". When this occurs, the first responder contacts his appropriate supervisor and a coordinated effort is placed into action with the property owner for cleaning and repairs to occur.

3.0 System and Organizational Structures

Implementing the SORP requires the following:

1. Effective and timely communication
2. Well-trained and experienced responders
3. Structured and concise response procedures
4. Accurate and comprehensive monitoring procedures
5. Continuous and annually scheduled re-evaluations of the plan

3.1 City of Oak Ridge Wastewater System

The City of Oak Ridge wastewater system is composed of:

1. 265 miles of gravity line
2. 50,000 feet of force main
3. 6,200 manholes
4. 35 pump stations
5. 1 wastewater treatment plant
6. 30 MGD treatment capacity
7. 10,991 connections
8. 27,387 population served

As the utility provider, the City of Oak Ridge owns and maintains the network of pipes, manholes and associated equipment that transport wastewater from homes and businesses to the treatment plant. This network is referred to as the collection system. Customers own the private service laterals from the served structure to the public main line.

3.2 City of Oak Ridge Operational and Functional Structure

An organizational chart for the City of Oak Ridge, Public Works Department is included in Appendix A.

3.3 Equipment and Tools

A detailed list of equipment and tools that are available for employees to utilize during a SSO is included in Appendix B.

3.4 SORP Procedures

The SORP will detail events from the time the City of Oak Ridge receives notification of a possible SSO until the confirmed SSO is contained and the site remediated. Response procedures provide guidelines for the evaluation, mitigation and correction of the conditions that are causing or contributing to an unpermitted discharge of untreated wastewater. The primary objectives of these procedures are to provide standard protocols, minimize risk and protect public health and the environment.

Emergency response procedures appropriate to the vulnerabilities, sensitive areas and critical facilities identified for the Public Works Department (PW) have been developed. These procedures reflect best management practices.

During regular working hours the PW Administrative Assistant will dispatch sewer maintenance personnel with appropriate equipment to confirm and contain the SSO and determine the cause. Crews and equipment are available for response during regular work hours Monday through Friday from 7:30 a.m. to 4:00 p.m. A three-member crew is available after hours in the on-call status. The phone calls are transferred to automatically ring at the Oak Ridge Police Department Dispatch who will contact the on-call crew leader if needed. PW relies on radios and cell phones for communication.

Preliminary Assessment

Upon arrival at the reported SSO site the response crew may request additional personnel, material, supplies and equipment from the Operations and Maintenance Manager (O&M Manager), if needed.

Response crews may report their findings, including possible damage to private and public property, to the O&M Manager upon making their investigation. Crew leaders have the authority to contact the City of Oak Ridge's insurance investigator to handle property damage.

In all cases, pictures will be taken of the overflow site before and after work to show the extent of the overflow, how much area is affected, and the route the flow traveled.

If needed, the O&M Manager will visit the site of the overflow to ensure the SORP is being followed. PW is responsible for informing TDEC of all SSO's within 24 hours of becoming aware of the event.

3.4.1 SORP-Sewer Blockage or Backup into Basement

EMERGENCY PROCEDURES

- Dispatch the crew immediately to the complainants address with details. Crew notifies complainant/property owner when they are on site.
- Check upstream and downstream manholes to visually compare flows.
- If the flow from both manholes is reasonable for the area, run the jet nozzle up the line to make sure the problem is not at the tap. If the City sewer is clear, notify the property owner that the problem is in their service lateral and to contact a plumber or sewer service contractor to relieve the blockage.
- If the downstream manhole is full and there is a potential for overflow, immediately begin the set up for pumping around the blockage.
- Request additional manpower and equipment as needed.
- Set up pump out equipment and hoses from the upstream manhole to nearest flowing manhole below the blockage.
- Continue to check downstream manholes until a dry manhole is found, indicating a blockage upstream.
- See “Overflowing Sewer Manhole” procedure for pumping around the blockage while the line is repaired.
- If no blockage is found and the problem is attributed to a pump station problem, refer to Pump Station Response.
- Using the jet truck or vac-truck, rod the line after installing the proper size debris basket or pole hoe in the downstream invert of the manhole to capture the debris.
- Remove the debris from the manhole and observe it to try to determine the cause of the blockage.
- Notify supervisor and describe the blockage. The supervisor will notify the proper authorities and agencies as needed.
- Cordon off the area if ponding occurs on the street or easement.
- Collect as much of the sewage as possible, disinfect, spread lime on the area and notify surrounding homes.

- Notify crews to schedule a CCTV inspection. Give approximate footage to problem from manhole.
- Prepare a report indicating the time of the call, a description of the problem, repair work performed, personnel present and equipment used.
- If sewage overflowed the collection system, complete the Sanitary Sewer Overflow report form as required.
- Notify TDEC within the required 24 hours, followed by the Final Report within five days.
- If sewer backed up into a basement, notify City's insurance company and give owner a claim form.

3.4.2 SORP-Overflowing Manhole Due to Surcharged Sewer Main

EMERGENCY PROCEDURES

- Dispatch the crew immediately to the problem.
- Before responding to the call, refer to sewer maps for location of sewers and manholes. Determine if a pump station serves the area.
- Go to the location of the overflowing manhole to assess the immediate danger to public health or the environment. Take pictures as needed.
- Determine the location of the blockage by inspecting the downstream manholes until a dry manhole is found.
- Install the proper size debris basket or pole hoe in the downstream invert of the manhole before cleaning the blockage to capture the debris. Use the jet rodder to relieve the blockage. Remove the debris from the manhole and assess it to try to determine the cause of the blockage.
- If it is imminent that the wastewater will be released into wetlands, receiving waters or a drinking water supply watershed, use the vac-truck and try to capture as much wastewater as possible and notify the supervisor. The supervisor may call in extra crews and equipment to set up flotation booms across streams, brooks, etc., if needed. The supervisor may notify the proper authorities and agencies.
- Gather and remove sewage related debris and organic matter from the affected area.

- If the wastewater is in the streets/roads use sand bags to contain the wastewater to minimize any impact to the public or environment.

- Sandbag nearby catch basin inlets or paved spillways to prevent the wastewater from entering the drainage system and causing potential contamination to the receiving waters.

- Cordon off areas if ponding occurs.

- Collect as much of the sewage as possible, disinfect and lime the area and notify surrounding homeowners.

- If the wastewater jeopardizes a playground or park, cordon off the area. Close the park to the public until the issue has been remediated to the satisfaction of the local and state regulatory authorities and the park management.

- Complete a report indicating the time of the call, description of the problem, repairs made and personnel and equipment used.

- If sewage overflowed the collection system, complete the Sanitary Sewer Overflow report form as required.

- Notify TDEC within the required 24 hours, followed by the Final Report within five days.

3.4.3 SORP-Cavities and Depressions in Streets and Lawns

EMERGENCY PROCEDURES

- When a call is received from the public, confirm that; (1) the problem area is a cavity or depression and not a missing or low manhole cover or catch basin grate; (2) the location of the reported cavity and the name and address of the person making the call.

- If the problem is severe, extensive or associated with sewer system, investigate and barricade the area. Lights and barricades should be used if the situation is dangerous.

- When checking a depression over a main line it is important to check the main sewer at both upstream and downstream manholes adjacent to the depression to determine if there is a restriction of flow. If there is a blockage, it may indicate a possible main sewer break.

- If the cavity is a result of sewer failure, refer to the procedures for “Sewer Main Breaks/Collapse”.

- If it has been determined that it is a cavity or depression caused by another utility (storm drain, water main, etc.), the crew should notify the supervisor.
- The crew leader should thoroughly document the nature and extent of the impact including the use of photographs and/or video footage.
- Complete a report indicating the time of the call, a description of the problem, the repair work done, personnel and equipment used.
- If sewage overflowed the collection system, complete the Sanitary Sewer Overflow report form as required.
- Notify TDEC within the required 24 hours, followed by the Final Report within five days.

3.4.4 SORP-Sewage Force Main Break

EMERGENCY PROCEDURES

- Dispatch a crew to the site to assess the situation, determine who or what might be affected and the immediate danger to the environment.
- Refer to sewer maps for location of sewer lines, manholes and what pump station is associated with the force main.
- Set up traffic cones and barricades as needed.
- Initiate measures to contain the overflow, protect the street, public areas, catch basins, etc. that might be subject to flooding and collect wastewater that has been discharged. These measures will help minimize impact to the public health and the environment.
- Determine if it will be possible to pump around the break from the pump station wet well to the force main discharge manhole or other accessible manhole. If it is possible, then prepare to pump around the break as follows: (1) request additional manpower and equipment as needed (excavating crews, bypass pumping equipment, etc.), (2) set up pump equipment and hoses from the wet well to the nearest sewer discharge point, (3) draw down the wet well as much as possible to maintain a low level, (4) lock out and tag out the pumps at the station.

- If pumping around the break is not possible, utilize the vac-truck or tanker truck to draw down the wet well as much as possible and maintain a low level.

- Call in additional crews as necessary to help contain the sewer overflow. Set up flotation booms across streams and sandbag storm drains, etc.

- Check the tributary area to determine if the discharge will affect any receiving waters and notify the proper authorities and agencies as necessary.

- If the wastewater is in the road, contain the wastewater to the extent possible with sandbags. Sandbag nearby catch basins inlets or paved spillways to prevent wastewater from entering the drainage system and causing potential contamination of receiving waters.

- Cordon off the area if ponding occurs. Collect as much of the wastewater as possible, disinfect and lime area and notify surrounding homeowners and the appropriate officials and agencies.

- If the wastewater jeopardizes a playground or park, cordon off the entire area. Close the park to the public until the issue has been remediated to the satisfaction of the local and state regulatory authorities and the park superintendent.

- Gather and remove sewage related debris and organic matter from the affected area.

- Drain the force main as follows: (1) close the gate valve on the upstream side of the discharge check valve on the pumping station, (2) Open the check valve by hand and secure it in place, (3) Bleed the force main back into the wet well by slowly opening the gate valve on the discharge side of the pump, but only to the point where the force main stops leaking and there is enough room to make the repair. Constant communication must take place between the crew at the leak and the crew at the pump station, (4) Close the gate valve and return the check valve to its normal operating position and then fully open the gate valve.

- Repair force main break.

- After the repair is complete, remove the lock out-tag out and return the pumps to normal operating position.

- Run the pumps in the hand position to fill the force main. Care must be taken while filling the force main (use only one pump

during filling). Once complete, observe several pump cycles before completely backfilling the excavation.

- Upon confirmation of no leaks at the repair, backfill the excavation and restore surface area.
- While the crew is restoring the excavation, the crew leader should conduct a preliminary assessment of damage to private and public property. The crew leader should thoroughly document the nature and extent of the impact using photographs and videos.
- Complete a report indicating the time of the call, a description of the problem, the repair work performed and persons and equipment used.
- If sewage overflowed the collection system, complete the Sanitary Sewer Overflow report form as required.
- Notify TDEC within the required 24 hours, followed by the Final Report within five days.

3.4.5 SORP-Sewer Main Breaks/Collapse

EMERGENCY PROCEDURES

- Dispatch a crew to the location of the break/collapse immediately while referring to the sewer maps for the location of sewer, manholes, etc., to determine if critical facilities are in the area.
- Crew sets up signs, barricades or barrels for traffic control and public safety, rerouting traffic as necessary and deploying traffic control measures such as police and flag persons as needed.
- If it is a main line break, notify the appropriate authorities.
- Request additional manpower and equipment as needed based on initial damage assessment (excavating crew, equipment to pump around break, etc.).
- Pumping around the break from the upstream manhole to the downstream manhole may be required. If necessary, set up bypass pumping equipment. If not necessary, prepare for repairs while the pipe is flowing.
- Call in additional crews to set up flotation booms across streams, install sandbags, etc., as needed. Unless special conditions exist, pumping around the failed sewer main is a priority before containing the overflow.

- Gather and remove sewage related debris and organic matter from the affected area.
- If the wastewater is in the street/roads use sandbags to contain the wastewater to minimize any impact to the public health or the environment.
- Sandbag nearby catch basin inlets or paved spillways to prevent the wastewater from entering the drainage system and causing potential contamination to the receiving waters.
- Cordon off the area if ponding occurs.
- Collect as much of the sewage as possible, disinfect and lime area; notify surrounding homeowners and the appropriate officials.
- If the wastewater jeopardizes a playground or park, cordon off the entire area. Close the park to the public until the issue has been remediated to the satisfaction of the local and state regulatory authorities and the local park superintendent.
- Determine the location of the break/collapse and make any necessary repairs. Use repair procedures consistent with policy. If the break is on the pipe length, then a repair can be made with a repair clamp. If the break is at the bell, cut out the bell and replace with a piece of pipe for a point repair.
- Upon confirmation of adequacy of the repair, backfill the excavation and restore surface conditions.
- To restore the sewer line to full capacity, the crew should remove any debris that may have entered and accumulated in the sewer line downstream and upstream from the break/collapse. The crew should clean the sewer line. Install the proper size debris basket in the downstream invert to trap any debris that may have accumulated in the sewer line.
- The crew leader should thoroughly document the nature and extent of the impact including the use of photographs and videos.
- Complete a report indicating the time of the call, a description of the problem, the repair work done personnel present and equipment used.
- If sewage overflowed the collection system, complete the Sanitary Sewer Overflow report form as required.
- Notify TDEC within the required 24 hours, followed by the Final Report within five days.

3.4.6 SORP-Air Release and Vacuum Valve Failure

EMERGENCY PROCEDURES

- These valves require frequent inspection and maintenance. Their failure is often found during routine inspections. Both valves may fail to operate if grease is allowed to accumulate in the valve or on the opening mechanism.
- The maintenance crew should inspect valves in accordance with the specific manufacturer's recommendations.
- Attach fittings at the top and bottom to permit flushing of all valves upon initial installation or retrofit upon failure.
- Isolate the valve from the force main by closing the shutoff valve attached to the force main.
- Clean the internal components of the valves. Attach a back-flushing hose to a pressurized water source using a quick disconnect coupling.
- Place a blow-off discharge hose in a container to collect the back-flush water from the blow-off valve. This is wastewater that should not be discharged onto the street or into the valve pit.
- Open the shutoff valve and back-flush the valve through the blow-off valve at the bottom.
- If a potable water source is being used, provide the system with an anti-siphon device or backflow device to prevent contamination of the potable water.
- Prepare a report indicating the time of the visit, description of the problem, repair work done and personnel and equipment used.
- If sewage overflowed the collection system, complete the Sanitary Sewer Overflow report form as required.
- Notify TDEC within the required 24 hours, followed by the Final Report within five days.

3.4.7 SORP-Wastewater Pump Station Alarms General Response Plan

EMERGENCY PROCEDURES

- Send an individual to the station indicating an alarm as soon as possible. Responders should bring a detailed station-specific

trouble-shooting guide with them for the pump station. If serious trouble is found, call for additional assistance and keep an individual at the station until further instructions are received.

- Always check with the Electric Department when an alarm activates. The pole number nearest the station should be reported to the Electric Department.

- Personnel called in to investigate pump station alarms shall respond to the station even if the alarm has cleared prior to their arrival. All alarm conditions are to be checked and logged. Use the following guidelines and follow confined space entry procedures.

Wet well/Dry well Stations

- Observe all safety precautions per training.

- Check the atmosphere within the dry well with a gas meter prior to entering.

- Upon entering, identify the storage capacity in the wet well. This will give some indication of the time available for response. If flooded, skip to pump-out steps under "Pumping Station Failure inside valve pits, Pump or Valve Failure".

- Take your time entering the dry well. Never enter a flooded dry well.

- Note any unusual odors (burning electrical equipment or paint).

- Listen and note any unusual noises.

- Check for heat around pump motors and pump bearing housings. Note anything that seems unusually hot.

- Observe every piece of equipment in the station. Note anything that looks out of place.

- Record all gauge readings including wet well hour meters, flow charts, on/off levels, pressure gauges on pumps, rpm and anything else deemed significant.

- Using available information and the trouble-shooting guide, systematically run through the system. Use a process of elimination to identify the cause of the failure. Check the level controls, pump operation using manual position, and check the pump outlet by pressing on the check valve counterweight as defined in the trouble-shooting guide. Once the cause is isolated, engage mechanical or electrical disciplines for repairs.

- Emergency personnel should be absolutely certain that the cause of the pump station alarm or failure has been properly identified and corrected prior to leaving the station.

- Reset any / all alarm feature indicator lights.

Submersible Type Stations

- Take all safety precautions per training.

- Check the atmosphere within the wet well with a gas meter prior to working over the station.

- Note any unusual odors (burning electrical wires, hot or smoking oil or paint).

- Listen for any unusual noises and note if pumps are operating.

- Observe every piece of equipment in the station. Specific attention should be given to level controls. Note anything that looks out of place.

- Record all gauge readings from the control panel wet well level, hour meters, flow charts, on-off levels, pressure gauges on pumps rpm and anything else deemed significant.

- Using available information and the trouble-shooting guide, systematically run through the system. Use a process of elimination to isolate the cause of the failure. Check level controls, pump operation using the manual position and pump output by observing the check valve counterweight as defined in the guide. Once the cause is isolated, engage mechanical and electrical disciplines for repairs.

- Emergency personnel should be absolutely certain that the cause of the pump station alarm or failure has been properly identified and corrected prior to leaving the station.

- Reset any/all alarm feature indicator lights.

- The Operation and Maintenance (O&M) manual should be used to check the level sensors and pump controls. Pumps may be checked for operation by checking the arm of the check valve in the discharge line of an operating pump. If it feels “spongy” or soft when pressed downward, the pumps are pumping. If a breaker is off and the pump motor is hot to the touch, do not attempt to reset and start. If a pump motor is simply warm, one attempt to restart can be made. If the pump has lost prime or is plugged the check valve will not open.

- If there has been an overflow at any pump station, prepare a report of the time and duration of the spill, cause and corrective actions, personnel and equipment on site.
- If sewage overflowed the collection system, complete the Sanitary Sewer Overflow report form as required.
- Notify TDEC within the required 24 hours, followed by the Final Report within five days.

3.4.8 SORP-Pump Station Failure due to Secondary Power Failure

EMERGENCY PROCEDURES

- Dispatch crews to the pump station immediately. The crew needs to bring the auxiliary generator for that specific station as a backup. If the dedicated generator can't be repaired in a timely manner the auxiliary generator will be installed.
- Upon entry, identify the storage capacity in the well. This will give some indication of the time available for response. If flooded, skip to pump out steps under "Pumping Station Failure Inside Valve Pit, Pump or Valve Failure" procedures.
- Crew may request the assistance of the Electric Department in restoring power to the station.
- As they approach the station, the crew should check the overhead power lines for fuses that might be blown or downed power lines. If the crew notices a blown fuse or downed power lines, identify the location and pole number and notify the Electric Department.
- Lock out and tag out (LOTO) the main line.
- Check all components of the dedicated generator to determine failure. Use the manufacturer's prepared troubleshooting guide to aid in the diagnosis. If it cannot be repaired immediately, connect the portable generator to the auxiliary power connection located outside the building. Examine plug type and insure consistency. Use adapters as necessary.
- Follow manufacturer's recommendation for starting the generator.
- Obtain the service of a qualified generator repair company to address the repairs to the dedicated generator.
- Once the dedicated generator is repaired, place back into service and return auxiliary generator to storage. Operate the dedicated generator through several cycles to insure reliability.
- If sewage overflowed the collection system, complete the Sanitary Sewer Overflow report form as required.
- Notify TDEC within the required 24 hours, followed by the Final Report within five days.

3.4.9 SORP- Pump Station Failure inside Valve Pit, Pump or Valve Failure

EMERGENCY PROCEDURES

- Dispatch crew to the pump station immediately**.**
- Prior to viewing the wet well, measure the atmospheric conditions for sufficient oxygen and the presence of explosive or toxic gases.
- Upon arrival, the crew should determine the storage capacity of the wet well. This will give some indication of the time for response. If flooded, skip to pump-out steps.
- Inspect the main controls looking for failure indicators. Check processors to determine failure. If pump failure is determined, skip to wet well inspection steps.
- Inspect the valve pit. Observe all valves and force mains. If flooded, skip to pump out steps.
- Constantly monitor the atmospheric conditions while working in or above the wet well. Inspect the wet well, checking the floats or level system, bar rack and pump volute area for clogging or other problems.

Pump-Out Steps

- If pump failure, determine if pump out is necessary. If so, skip to repair procedures.
- Pump the flow with portable pumps. If necessary, call additional crews to bring appropriate portable pumps, suction and discharge hose to the station. Connect the portable pump placing the suction hose in the wet well and the discharge hose to a downstream manhole or pre-determined connection point. Start the portable pump and begin pumping.

Repair Steps

- Lock out and tag out (LOTO) the main line.
- Monitor the atmospheric conditions for sufficient oxygen and the presence of explosive or toxic gases. If safe, enter valve pit or wet well and inspect the piping and valves for cause of failure.

- Complete repairs to the pipe, pump or valve. If permanent materials are not available, install temporary repairs until the permanent repairs are complete.
- Restore facilities to normal and inspect other components of the force main and pumping system for signs of similar failure.
- Shut down portable pumping operations. Do not disconnect hoses until repair is checked for leaks. Operate pump to check repair under pressure and normal operating conditions.
- If no leak is observed, return pumps to normal operations by removing LOTO. Monitor pumps for leaks.
- Prepare a report indicating the time of the call, description of the problem, the repair work done, personnel present and equipment used.
- If sewage overflowed the collection system, complete the Sanitary Sewer Overflow report form as required.
- Notify TDEC within the required 24 hours, followed by the Final Report within five days.

4.0 Sanitary Sewer Overflow (SSO) Discovery, Recording and Reporting Process

- All SSO's should be recorded and reported for future reference.
- Recorded data should include:
  1. Date
  2. Time SSO started
  3. Time SSO stopped
  4. Location (address, manhole number)
  5. Cause (grease, roots, blockage, etc.)
  6. Estimated volume
  7. Ultimate destination (river, storm drain, ditch, etc.)
  8. Corrective action taken to stop SSO
  9. How SSO was initially reported
  10. Names of responders

11. Sewer system component from which the SSO was released (manhole, crack in pipe, pump station wet well, constructed over flow pipe).

12. Date of last SSO at same location if there was one.

13. Report of all notifications to the public and other agencies or departments.

4.1 SSO Evaluation and Review

- A responding crewmember shall sign all sanitary sewer overflow report forms.
- All reports of SSO's shall be reviewed by a supervisor and signed.
- The City shall keep all SSO reports for a period of not less than 5 years from the date of the overflow.
- The City shall keep customer complaints concerning SSO's for a period of not less than 5 years.
- Being consistent with the NPDES permit, if five SSO's occur at the same location over a 12 month period, a detailed plan shall be submitted to TDEC on the City's plans to resolve this issue.
- A monthly meeting shall be scheduled for administrative, supervisors and crew leaders to review all SSO's that have occurred. A plan of action shall be established on how to prevent a repeat of SSO's. This could include point repairs, grease control, root eradication, cleaning of lines, replacement of lines, pump station repairs or replacement, etc. Minutes of all meetings shall be kept and reviewed.

4.2 Reporting Process

Two forms for reporting each SSO to TDEC are included in Appendix C. One is an initial form to email (addresses already on form) within 24 hours and one is a form for a final report.

- A Sewer Overflow Report shall be completed on all overflows.
- All SSO's shall be reported to TDEC within 24 hours of the time the City first became aware of the SSO. This initial report shall be sent by email.
- A copy of the Final Overflow Report shall be faxed to TDEC within five days of the overflow.
- The City shall identify and establish a list of SSO locations within the collection system that have been recorded as overflowing more than once and are likely to occur first in the event of a pump station failure or rain event. The City shall establish routine inspection routes to be performed during and after each rain event. This would specifically include all pump

stations that are not monitored via telemetry, SCADA or other remote monitoring devices.

- Any SSO that occurs, which management determines might impose a health risk to the public, shall be properly posted with signs, taped off, etc. Local news media may be notified as needed to inform the public.

4.3 Other Public Notifications

Should the posting of surface water or ground surfaces to an overflow be deemed necessary by TDEC, the City shall comply as directed.

Signs shall be posted to notify the public of bypass/overflow points that have discharged five or more times in the last year and shall be clearly visible to the public. The minimum size shall be two feet by two feet with one-inch letters. The sign shall be made of durable material and have a white background with black letters.

City of Oak Ridge Administration shall determine further public notification through the use of printed or electronic news media.

4.3.1 Contact Information

John West – TDEC, Knoxville Basin Office; (865) 594-5522;
John.West@tn.gov

Farokh Kamel – TDEC, Knoxville Basin Office; (865) 594-5586;
Farokh.Kamel@tn.gov

Lanny Bonds – TDEC, Knoxville Basin Office; (865) 594-5594;
Lanny.Bonds@tn.gov

Gabe Davis – Anderson County Health Dept.; (865) 425-8777;
Gabe.Davis@tn.gov Gabe said ACHD doesn't require notification.

4.4 Likely Overflow Sites

When a rain event occurs, City crews will inspect each sewer pump station that is not monitored at a central location by a remote monitoring device. Crews will also inspect a list of all manholes known to have overflowed more than once. Inspections will begin at the eastern most part of the collection system and work west.

A manhole that overflows which is not on the duplicate overflow list will have the lines cleaned and tv'd as marked on the SSO report, to determine if repairs are needed. City crews will make needed repairs if feasible. If not, the report is given to the City's Engineer to be contracted for repair. The location goes to the Sewer Maintenance Crew to watch and keep the lines flowing. The Sewer Maintenance Crew Chief maintains a list of locations to clean on a routine basis until repairs are made. A manhole that overflows more than once within a 12 month period will be added to the duplicate overflow list. The Operations & Maintenance Manager will maintain the overflow list along with the Crew Chief.

SSO locations will be removed from the duplicate overflow list after the areas mini-system has been rehabbed and there are no more SSO's after significant rainfalls that would have previously caused the SSO.

In accordance with the NPDES permit, a **rainfall event** is defined as any occurrence of rain, preceded by 10 hours without precipitation that results in an accumulation of 0.01 inches or more. Instances of rainfall occurring within 10 hours of each other will be considered a single rainfall event.

Listed below are overflow points in the collection system that have overflowed at least twice in the past two years. Dates, location and manhole number are included. Also listed are likely overflow points if a wastewater lift station fails.

Locations of Duplicate SSO's from 9/1/08-9/30/10

12/9/2009	119 Athens Road	Manhole D1018
12/18/2009	119 Athens Road	Manhole D1018
11/4/2009	151 Cairo Lane	Manhole G22-14
12/9/2009	151 Cairo Lane	Manhole G22-14
12/25/2009	151 Cairo Lane	Manhole G22-14
12/10/2008	117 N. Purdue Avenue	Manhole D-40
12/11/2008	117 N. Purdue Avenue	Manhole D-40
1/7/2009	117 N. Purdue Avenue	Manhole D-40
5/6/2010	115 Athens Road	Manhole D1010
1/25/2010	115 Athens Road	Manhole D1010
1/22/2010	151 Cairo Lane	Manhole G2213, G2214
1/26/2010	151 Cairo Lane	Manhole G2213, G2214
2/8/2010	151 Cairo Lane	Manhole G2213
5/6/2010	151 Cairo Lane	Manhole G2214
5/7/2010	151 Cairo Lane	Manhole G2214
1/25/2010	103 Dallas Lane	Manhole D809
2/5/2010	103 Dallas Lane	Manhole D809
1/22/2010	216 South Illinois Avenue	Manhole J1116
1/25/2010	216 South Illinois Avenue	Manhole J1116
2/5/2010	216 South Illinois Avenue	Manhole J1116
2/5/2010	216 South Illinois Avenue	Manhole J1116
5/3/2010	216 South Illinois Avenue	Manhole J1116
1/25/2010	103 Mohawk Road	Manhole C325
2/5/2010	103 Mohawk Road	Manhole C325
1/25/2010	1403 Oak Ridge Turnpike	Manhole G118
2/5/2010	1403 Oak Ridge Turnpike	Manhole G118
2/5/2010	1403 Oak Ridge Turnpike	Manhole G118
5/3/2010	1403 Oak Ridge Turnpike	Manhole G118
5/3/2010	1403 Oak Ridge Turnpike	Manhole G118
1/25/2010	535 Oak Ridge Turnpike	Manhole F702
5/3/2010	535 Oak Ridge Turnpike	Manhole F702
2/5/2010	117 North Purdue Avenue	Manhole G1513
5/3/2010	117 North Purdue Avenue	Manhole G1513

SSO Locations Likely if Wastewater Lift Stations Fail

	Station	SSO Location
1.	Westview Ln. (129 Westview Ln.)	MH A3W22 at station
2.	William Ln.	MH AN4W-9 at station
3.	Whippoorwill Ln. (104 Whippoorwill Ln.)	MH A3W-22 at station
4.	West Outer Dr. (1129 W. Outer Dr.)	MH A8W-1 at station
5.	Southwood Ln. (E. Southwood at Shagbark Ln.)	MH F5W-2 at station
6.	Oak Hills (Oak Ridge Tnpke. east of Westover)	MH 2W-9 at station
7.	Gum Hollow (197 Gum Hollow)	MH H2W-2 at station
8.	Graceland (113 Graceland Rd.)	MH H4W-6 at station
9.	Turtle Park (Monterey Rd.)	MH D22 at 2491 ORT
10.	Peach Orchard (105 Wedgewood Rd)	MH G13-22 at station
11.	Home Depot	MH G1723 at 175 Laboratory
12.	Fairbanks (545 Oak Ridge Tnpke)	At the station
13.	Emory Heights (Coe Rd.)	MH G20-4A at 103 Clark Ln.
14.	Warehouse Rd. (East of Dresden)	MH F804A at 503 Warehouse
15.	East Plant (151 Cairo Rd.)	MH G22-13 at station
16.	Castlewood (Arcadia Ln.)	MH D1103B on Arcadia Ln.
17.	WATO (113 Eastburn Ln.)	MH C1203 at 112 Eastburn Ln.
18.	Riversway (120 Marywater Ln)	MH F24-13 at station
19.	Greggory's (Melton Lk. Peninsula)	MH G24-7 at 59 Riversway Dr.
20.	Palisades #1 (10 Palisades)	MH G23-2 at station
21.	Palisades #2 (18 Palisades)	MH G23-3 at station
22.	Palisades #3 (28 Palisades)	MH G23-10 at station
23.	Palisades #4 (40 Palisades)	MH G22-22 at 42 Palisades
24.	Marina (695 Melton Lk.)	MH L24-1 at station
25.	Summit Ridge (720 S. Ill. Ave.)	MH N14-9 at station
26.	Emory Valley (301 Emory Valley)	MH L22-20 at station
27.	Rivers Run (100 Rivers Run Blvd.)	MH P25-2 at 3 Rivers Run Blvd
28.	Radisson Cove	MH P26-2 at station
29.	Rolling Links (51 Rolling Links)	MH Q26-11 at station
30.	Rock Bridge Greens (117 Rock Bridge)	MH R24-8 at station
31.	Park Meade (1402 Edgemoor Rd.)	MH U21-1 at station
32.	Centennial Bluff (300A Centennial Bluff)	At station
33.	Pump House Rd.	MH U14-13 at station
34.	Scarboro Rd.	At station
35.	Wolf Creek (108 Pavilion Dr.)	At station

Estimating Volumes from SSO

To determine the amount of gallons in a sewage discharge, the volume of the discharge must be determined. A reference sheet with pictures for estimating overflows showing water at various gpms discharging from manholes is included in Appendix D. The following are some examples of other ways to determine the total volume:

Example 1:
A discharge of 100 ft. x 100 ft. x 0.5 ft.

If it is a rectangular ponded area:
Volume= Length (ft.) x Width (ft.) x Depth (ft.)
X 7.48 gal/ cu ft. = Gallons

100ft x 100ft x .5 ft. x 7.48= 37,400 gallons

Example 2:
A discharge 100 ft. diameter x 0.5 ft.

If it is a circular ponded area:
Volume= Diameter (ft. squared) x .785 x Depth (ft.) x 7.48 gal/ cu ft. = Gallons
100 ft. diameter circular pond
100ft x 100ft x .785 x 0.5 x 7.48= 29,359 gallons

If an overflow has been discharged into a storm drain, the gallons must be estimated by the elapsed time of the overflow multiplied by the number of services connected by 200 gallons per household per 24 hours.

Example 3:
If there are 6 houses on a line and it has been overflowing for 24 hours:
Volume= 6 houses x 200 gal per house = 1,200 gallons

Example 4:
If there are 60 houses on a line and it has been overflowing for 1 hour:
60 houses x 200 gal per house/24 hrs. divided by 24 hours a day = 500 gallons

5.0 Training

The commitment of management to training is key to a successful program. A collection system with untrained or poorly trained collection system personnel runs a greater risk of experiencing noncompliance.

The following elements are essential for an effective training program:

- Fundamental mission, goals, and policies of the collection and treatment facility are addressed.
- Mandatory training requirements are identified for key employees.
- On-the-job training progress and performance are measured.
- Effectiveness of the training is assessed including periodic testing, drills or demonstrations.
- New employees receive training.

The City will continue to provide training in the following areas:

- Routine line maintenance (on the job training)
- Safety during confined space entry
- Traffic control
- Record keeping
- Pump station O&M
- Electrical and instrumentation (formal or OJT)
- Public relations and customer service
- SSO/Emergency response
- Pipe repair (trenching/shoring)

Sources of Training

- Manufacturer
- In-house
- On-the-job (OJT)
- Industry wide (consultants, regulatory authorities, professional associations, or educational instructions)

The Operations and Maintenance Manager shall be responsible for routinely assess the effectiveness of training through periodic testing, drills, demonstrations, or informal reviews and improve training based on this assessment.

5.1 Review and Update SORP

The City of Oak Ridge will review the SORP annually during the month of July and amend it as appropriate. Review shall include, as a minimum, the following:

- Conduct workshops with supervisors and key personnel to review response activities and gather suggestions for new or revised procedures.
- Review all contact lists and update as necessary.
- Update the SORP when TDEC issues a new or revised NPDES permit.

APPENDIX A--ORGANIZATIONAL CHARTS

PW Supervision

PW Treatment Plants

PW Work Pool

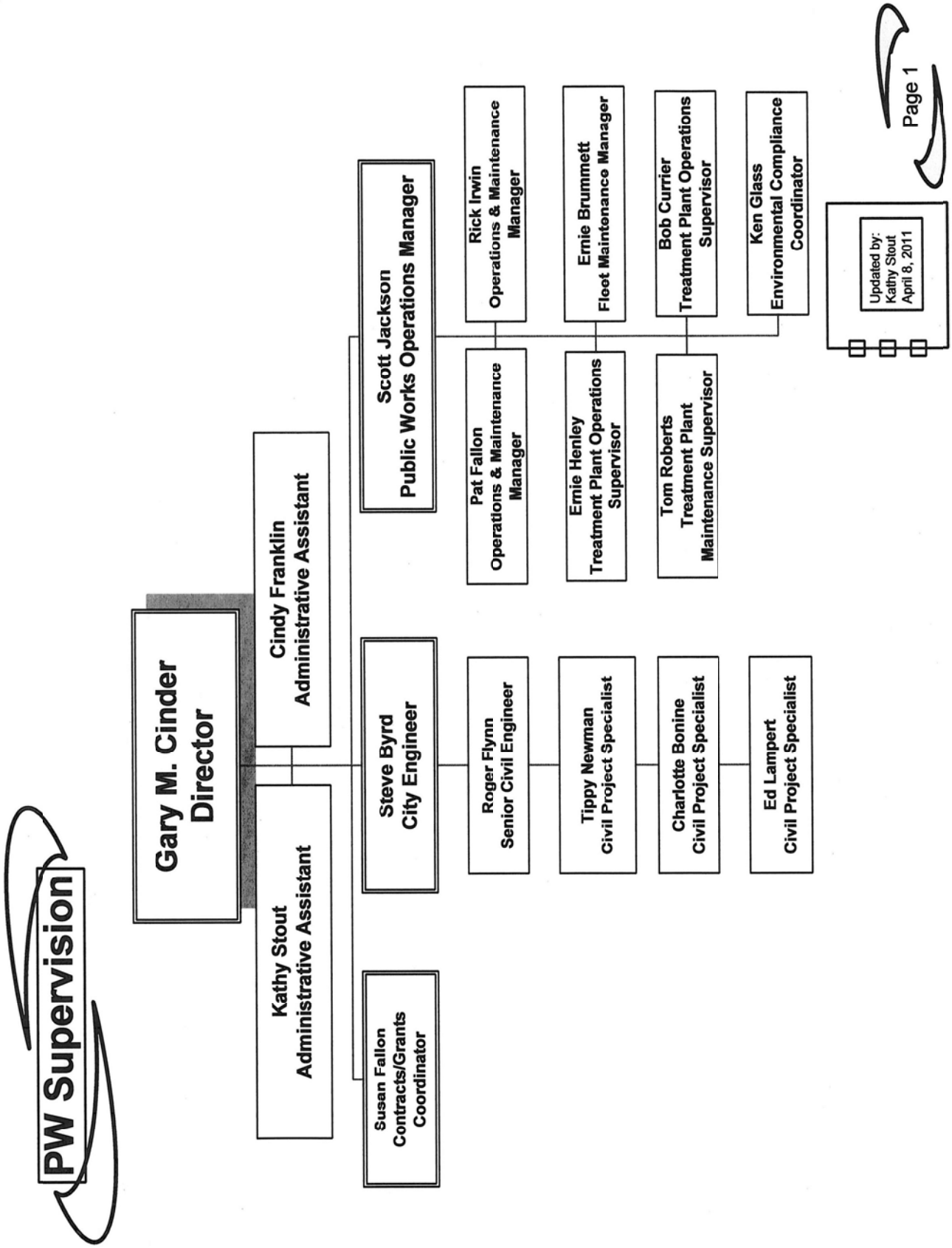
PW Supervision
Gary M. Cinder
Director
Cindy Franklin
Administrative Assistant
Kathy Stout
Administrative Assistant
Scott Jackson
Public Works Operations Manager
Steve Byrd
City Engineer
Susan Fallon
Contracts/Grants
Coordinator
Rick Irwin
Operations & Maintenance
Manager
Pat Fallon
Operations & Maintenance
Manager
Ernie Brummett
Fleet Maintenance Manager
Ernie Henley
Treatment Plant Operations
Supervisor
Bob Currier
Treatment Plant Operations
Supervisor
Tom Roberts
Treatment Plant
Maintenance Supervisor
Ken Glass
Environmental Compliance
Coordinator
Roger Flynn
Senior Civil Engineer
Tippy Newman
Civil Project Specialist
Charlotte Bonine
Civil Project Specialist
Ed Lampert
Civil Project Specialist
Updated by:
Kathy Stout
April 8, 2011
Page 1

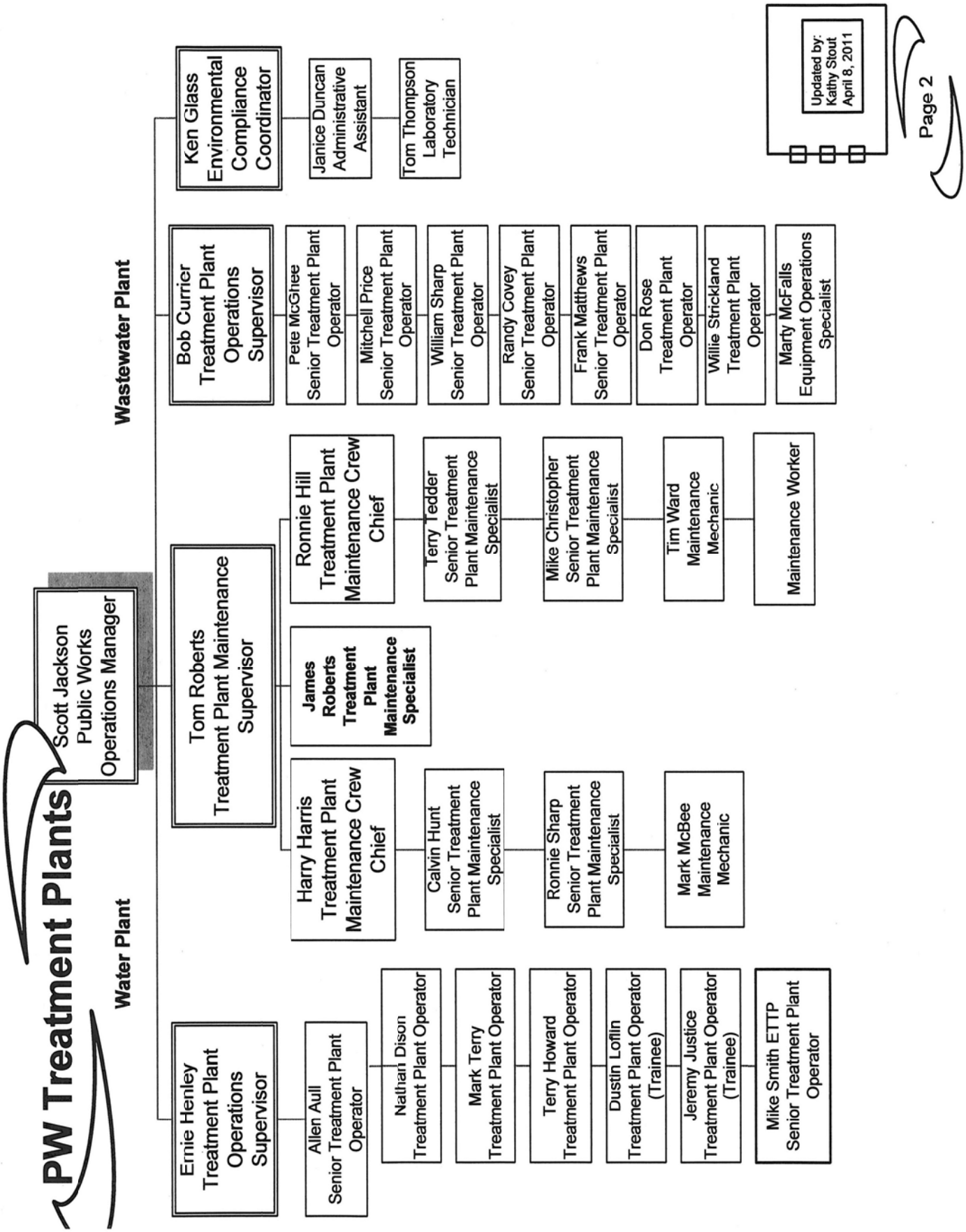
PW Treatment Plants
Scott Jackson
Public Works
Operations Manager
Wastewater Plant
Water Plant
Ken Glass
Environmental
Compliance
Coordinator
Janice Duncan
Administrative
Assistant
Tom Thompson
Laboratory
Technician
Bob Currier
Treatment Plant
Operations
Supervisor
Pete McGhee
Senior Treatment Plant
Operator
Mitchell Price
Senior Treatment Plant
Operator
William Sharp
Senior Treatment Plant
Operator
Randy Covey
Senior Treatment Plant
Operator
Frank Matthews
Senior Treatment Plant
Operator
Don Rose
Treatment Plant
Operator
Willie Strickland
Treatment Plant
Operator
Marty McFalls
Equipment Operations
Specialist
Tom Roberts
Treatment Plant Maintenance
Supervisor
Ronnie Hill
Treatment Plant
Maintenance Crew
Chief
Terry Tedder
Senior Treatment
Plant Maintenance
Specialist
Mike Christopher
Senior Treatment
Plant Maintenance
Specialist
Tim Ward
Maintenance
Mechanic
Maintenance Worker
James
Roberts
Treatment
Plant
Maintenance
Specialist
Harry Harris
Treatment Plant
Maintenance Crew
Chief
Calvin Hunt
Senior Treatment
Plant Maintenance
Specialist
Ronnie Sharp
Senior Treatment
Plant Maintenance
Specialist
Mark McBee
Maintenance
Mechanic
Ernie Henley
Treatment Plant
Operations
Supervisor
Allen Aull
Senior Treatment Plant
Operator
Nathan Dison
Treatment Plant Operator
Mark Terry
Treatment Plant Operator
Terry Howard
Treatment Plant Operator
Dustin Loflin
Treatment Plant Operator
(Trainee)
Jeremy Justice
Treatment Plant Operator
(Trainee)
Mike Smith ETTP
Senior Treatment Plant
Operator
Updated by:
Kathy Stout
April 8, 2011
Page 2

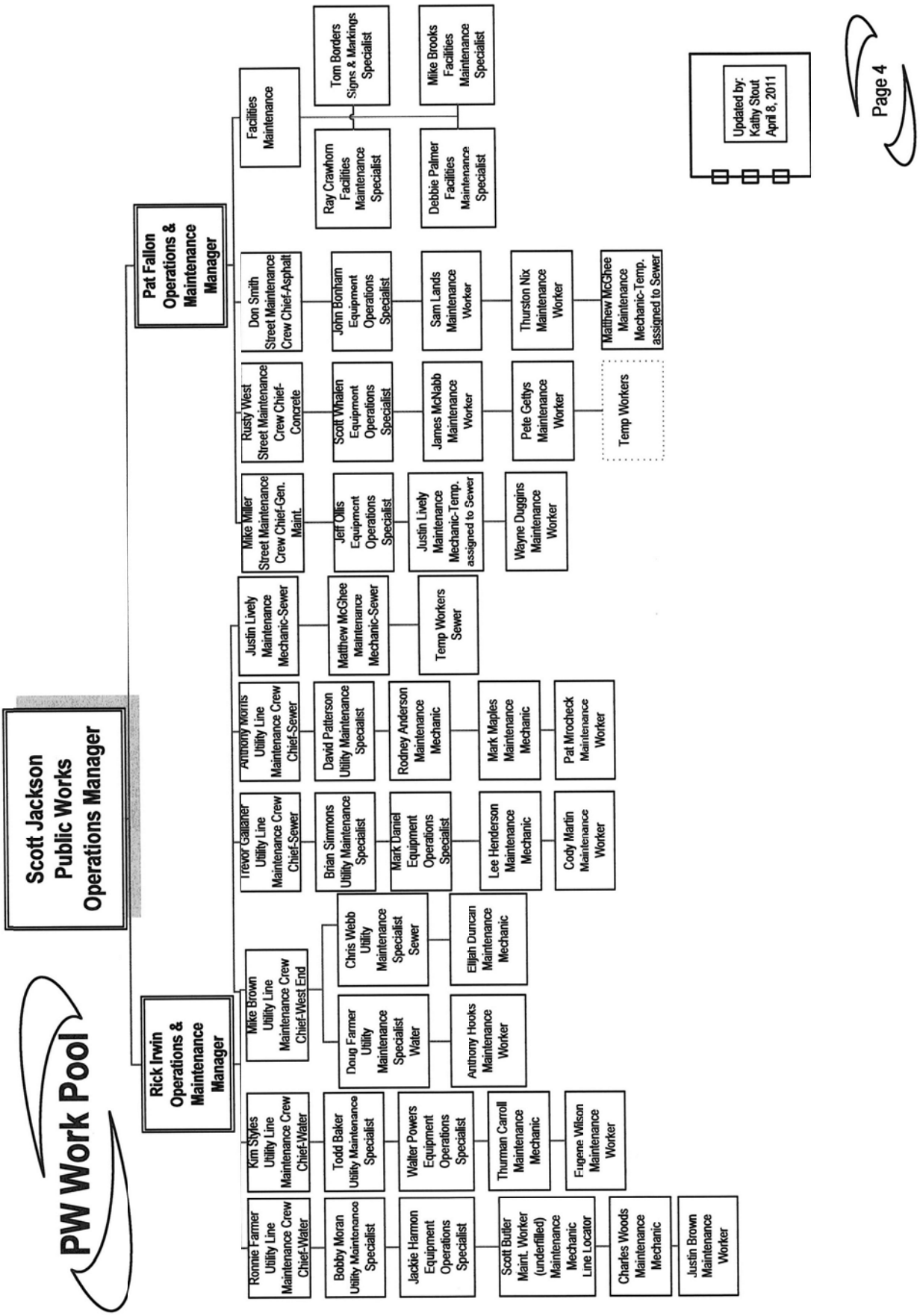
PW Work Pool
Scott Jackson
Public Works
Operations Manager
Pat Fallon
Operations &
Maintenance
Manager
Rick Irwin
Operations &
Maintenance
Manager
Facilities Maintenance
Tom Borders Signs & Markings Specialist
Mike Brooks Facilities Maintenance Specialist
Ray Crawhorn Facilities Maintenance Specialist
Debbie Palmer Facilities Maintenance Specialist
Don Smith Street Maintenance Crew Chief-Asphalt
John Bonham Equipment Operations Specialist
Sam Lands Maintenance Worker
Thurston Nix Maintenance Worker
Matthew McGhee Maintenance Mechanic-Temp. assigned to Sewer
Rusty West Street Maintenance Crew Chief-Concrete
Scott Whalen Equipment Operations Specialist
James McNabb Maintenance Worker
Pete Gettys Maintenance Worker
Temp Workers
Mike Miller Street Maintenance Crew Chief-Gen. Maint.
Jeff Ollis Equipment Operations Specialist
Justin Lively Maintenance Mechanic-Temp. assigned to Sewer
Wayne Duggins Maintenance Worker
Justin Lively Maintenance Mechanic-Sewer
Matthew McGhee Maintenance Mechanic-Sewer
Temp Workers Sewer
Anthony Morris Utility Line Maintenance Crew Chief-Sewer
David Patterson Utility Maintenance Specialist
Rodney Anderson Maintenance Mechanic
Mark Maples Maintenance Mechanic
Pat Mrocheck Maintenance Worker
Trevor Gallaher Utility Line Maintenance Crew Chief-Sewer
Brian Simmons Utility Maintenance Specialist
Mark Daniel Equipment Operations Specialist
Lee Henderson Maintenance Mechanic
Cody Martin Maintenance Worker
Mike Brown Utility Line Maintenance Crew Chief-West End
Chris Webb Utility Maintenance Specialist Sewer
Elijah Duncan Maintenance Mechanic
Doug Farmer Utility Maintenance Specialist Water
Anthony Hooks Maintenance Worker
Kim Styles Utility Line Maintenance Crew Chief-Water
Todd Baker Utility Maintenance Specialist
Walter Powers Equipment Operations Specialist
Thurman Carroll Maintenance Mechanic
Eugene Wilson Maintenance Worker
Ronnie Farmer Utility Line Maintenance Crew Chief-Water
Bobby Moran Utility Maintenance Specialist
Jackie Harmon Equipment Operations Specialist
Scott Butler Maint. Worker (underfilled) Maintenance Mechanic Line Locator
Charles Woods Maintenance Mechanic
Justin Brown Maintenance Worker
Updated by: Kathy Stout April 8, 2011
Page 4

APPENDIX B--EQUIPMENT AND TOOLS

- Jet Rodder and assorted cleaning/cutting attachments
- Air blower with hose
- Power Vacuum
- Portable pumps
- Portable generators
- Safety cones/barricades
- Gas meter
- Confined space entry tripod and assorted equipment
- Map book
- Closed circuit television camera unit
- Truck with hoist
- Power saw
- Debris basket
- Pole hoe
- Sand bags
- Vac-truck
- Pipe cutters
- Floatation booms
- Safety harness and lifeline
- Caution tape
- Hoses
- Backhoe or track hoe
- Standard disinfectants
- Lime
- Emergency lights
- Flash lights

- Assorted types of hand tools
- Assorted types of electrical repair and testing equipment
- First aid kit

APPENDIX C--TWO SSO FORMS

Initial 24 hr. Notice

Final Report

Stout, Kathy

Sent:	Friday, October 08, 2010 1:16 PM
To:	'John West'
Cc:	Jackson, Scott; Irwin, Rick; Cinder, Gary; 'Farokh.Kamel@tn.gov'; Lanny.Bond@tn.gov; Currier, Robert
Subject:	24 Hour Notification of a Sanitary Sewer Overflow

City of Oak Ridge
24 Hour Notification of a Sanitary Sewer Overflow

NPDES Permit # _____ TN0024155
Or
NPDES Permit # _____ TN0078051

Form filled out by (Name): _____

Overflow Date: _____

Manhole #: _____

Address (Or Nearest Address To Overflow): _____

As mandated by our NPDES Permit, a written report with the required information of the sanitary sewer overflow will be submitted within the next five days. If you have any further questions regarding this matter, please call (865) 425-1875. Thank you.

Rick Irwin
City Of Oak Ridge
Operations and Maintenance Manager

CITY OF OAK RIDGE

REPORT DATE: **SANITARY SEWER OVERFLOW FINAL REPORT** **NPDES PERMIT # TN0024155**

LOCATION DATA

LOCATION: **1st Occurrence at this location? Y ☐ N ☐**

If No, Date of Last Occurrence:

POINT OF OCCURANCE

Manhole ☐ Clean Out ☐ In-House Backup ☐ Lift Station Name: **None** or **None** or **None**

If Manhole; Give Mini-system # Map Page # Manhole # Force Main: ☐

FLOW DATA

Start Date: Time: AM ☐ PM ☐ End Date: Time: AM ☐ PM ☐

Duration hours/minutes Est. Flow Rate: gpm Estimated Total Flow: gallons

CAUSES

(Check all that apply)

Rainfall ☐ [Estimated amount in] Power Outage ☐ Equipment Failure ☐

Broken Sewer ☐ Blocked line from Roots ☐ Grease ☐ Collapse ☐ Other ☐

Explain causes of overflow:

REMEDIAL MEASURES TO CORRECT, PREVENT OR MINIMIZE FUTURE OCCURANCES

Line was: Jet Rodded ☐ Nozzle ☐ Root Saw ☐ Lid Removed ☐ Limed ☐ Equipment Repair ☐

Line will be: cleaned and TV'd for needed repair: ☐ Other:

WHERE DID DISCHARGE GO (Check all that apply)

Did flow run to surface water: Yes ☐ No ☐ Name of surface water:

Ran on/in: Ground & absorbed into soil ☐ Ditch ☐ Storm Sewer ☐

Basement Back-up ☐ No. of basements Use (i.e., commercial, residential)

Other (describe)

Notified Public: Yes ☐ No ☐ How: City Web Site ☐ The Oak Ridger ☐ Signs Posted ☐ Date:

Names of Responders:

Report completed by_____ **Title:**_____ **Date:**_____

Reviewed by _____ **Title:** _____ **Date:**_____

Initial TDEC Notification By: **Date:**

After Review & Notification to TDEC _____ **Title: Operations Manager** **Date:**_____

Final Review _____ **Title: Public Works Director** **Date:**_____

Final Report Transmitted to TDEC **By:** _____ **Date:**_____

Revision 9 **Kathy Stout** **December 8, 2010**

APPENDIX D--PHOTOS-ESTIMATING SSO's FROM MANHOLES

APPROXIMATELY 75 GPM

Flow (GPM)	Approximate Height of Discharge from Manhole Rim (in)	Approximate Depth of Flow on Pavement (in)	Approximate Width of Flow 10' Down from Overflow (ft)	Notes
75	0.25	< .25	2.0	Slope - 1.5% over asphalt MH Cover: 124 lbs, 23.5" dia

APPROXIMATELY 100 GPM

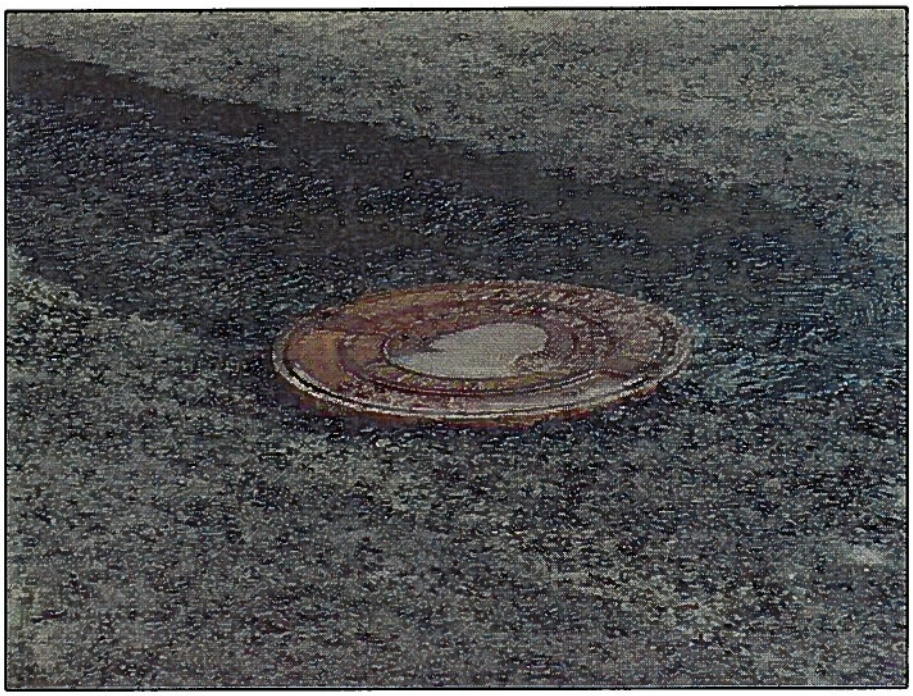

Flow (GPM)	Approximate Height of Discharge from Manhole Rim (in)	Approximate Depth of Flow on Pavement (in)	Approximate Width of Flow 10' Down from Overflow (ft)	Notes
100	0.50	< .25	2.0 – 3.0	Slope - 1.5% over asphalt MH Cover: 124 lbs, 23.5" dia

APPROXIMATELY 125 GPM

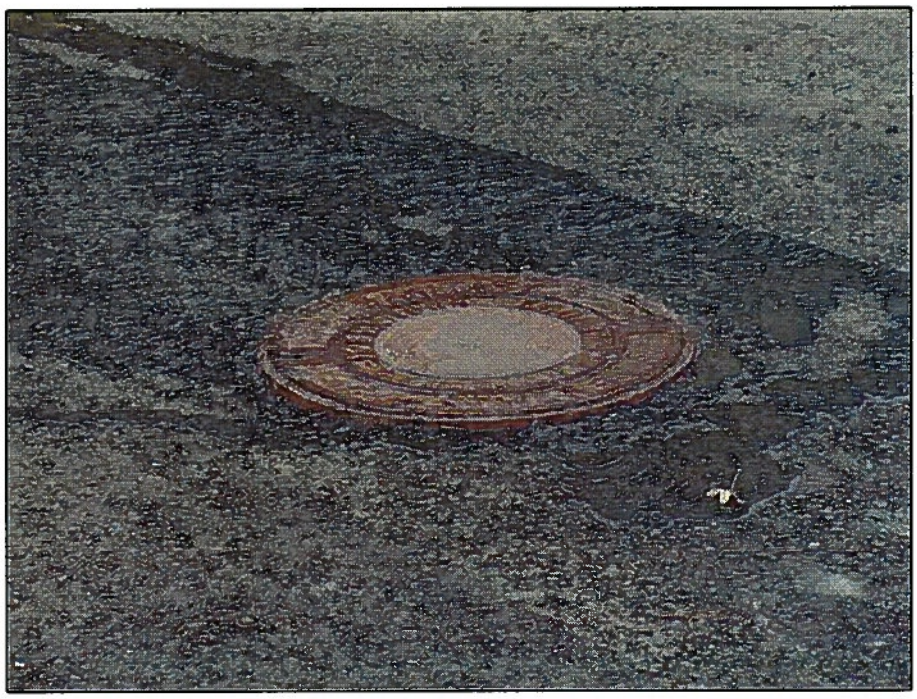

Flow (GPM)	Approximate Height of Discharge from Manhole Rim (in)	Approximate Depth of Flow on Pavement (in)	Approximate Width of Flow 10' Down from Overflow (ft)	Notes
125	0.50	< .25	3.0 - 3.5	Slope - 1.5% over asphalt MH Cover: 124 lbs, 23.5" dia

APPROXIMATELY 250 GPM

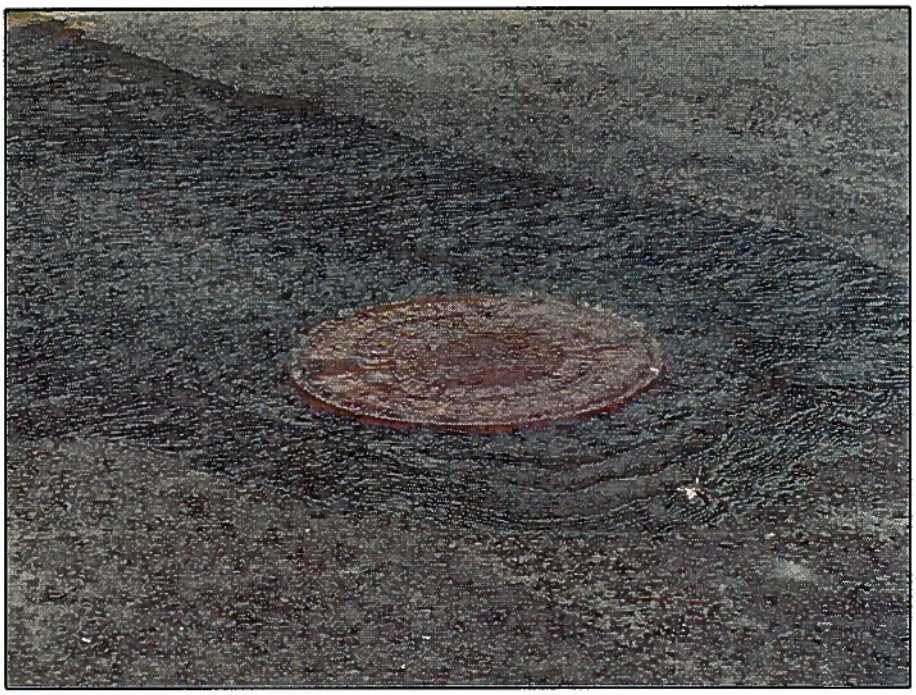

Flow (GPM)	Approximate Height of Discharge from Manhole Rim (in)	Approximate Depth of Flow on Pavement (in)	Approximate Width of Flow 10' Down from Overflow (ft)	Notes
250	1.00	< .50	5.0 – 6.0	Slope - 1.5% over asphalt MH Cover: 124 lbs, 23.5" dia

APPROXIMATELY 400 GPM

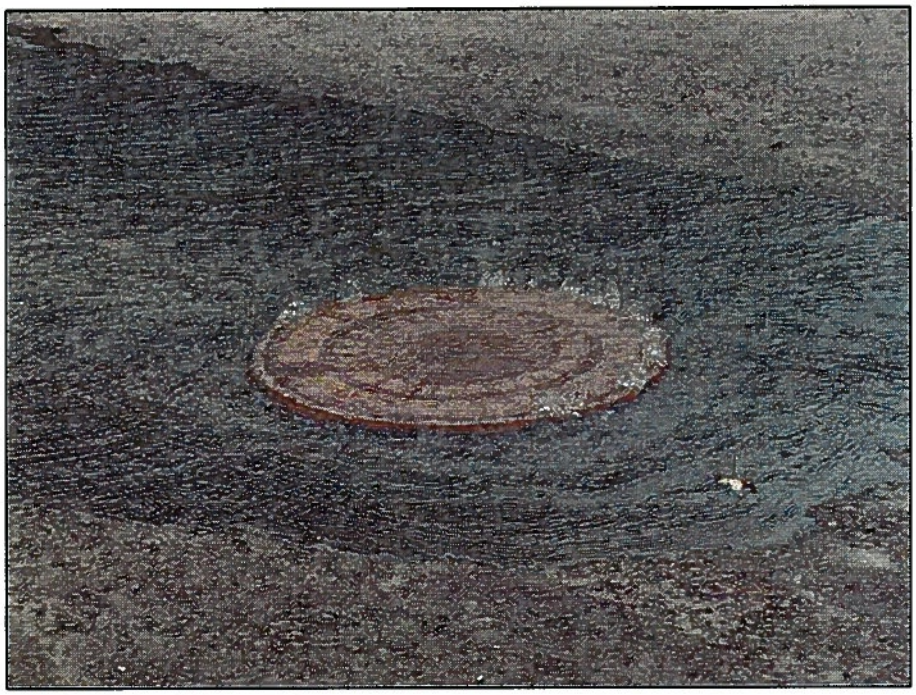

Flow (GPM)	Approximate Height of Discharge from Manhole Rim (in)	Approximate Depth of Flow on Pavement (in)	Approximate Width of Flow 10' Down from Overflow (ft)	Notes
400	1.5	< .50	10.0	Slope - 1.5% over asphalt MH Cover: 124 lbs, 23.5" dia

APPROXIMATELY 750 GPM

Flow (GPM)	Approximate Height of Discharge from Manhole Rim (in)	Approximate Depth of Flow on Pavement (in)	Approximate Width of Flow 10' Down from Overflow (ft)	Notes
750	2.5 - 3.0	< .50	13.0	Slope - 1.5% over asphalt MH Cover: 124 lbs, 23.5" dia

APPROXIMATELY 1,125 GPM

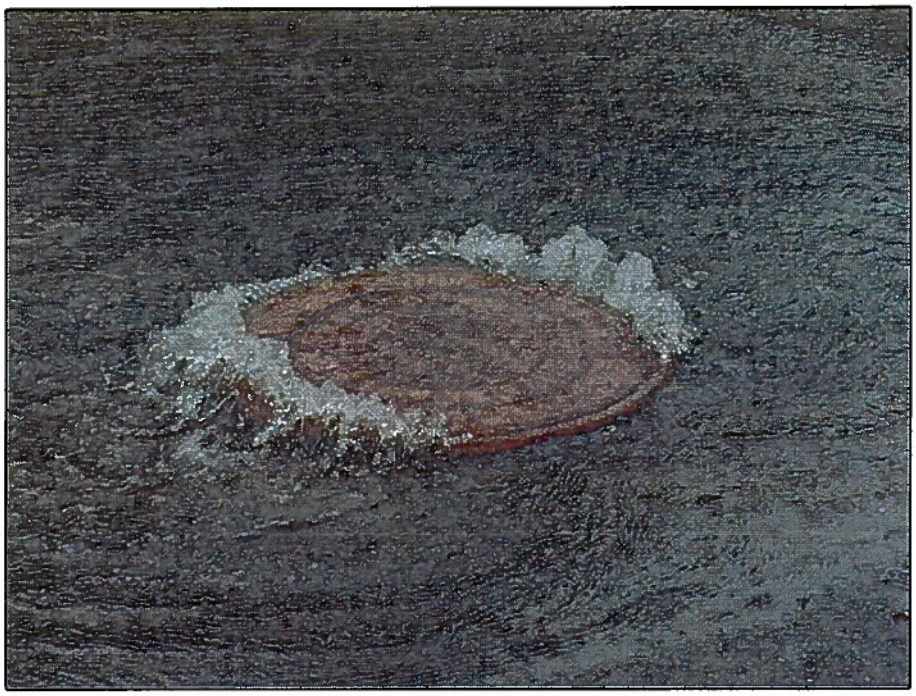

Flow (GPM)	Approximate Height of Discharge from Manhole Rim (in)	Approximate Depth of Flow on Pavement (in)	Approximate Width of Flow 10' Down from Overflow (ft)	Notes
1125	4.0	< .50	16.5 - 17.5	Slope - 1.5% over asphalt MH Cover: 124 lbs, 23.5" dia

APPROXIMATELY 1,500 GPM

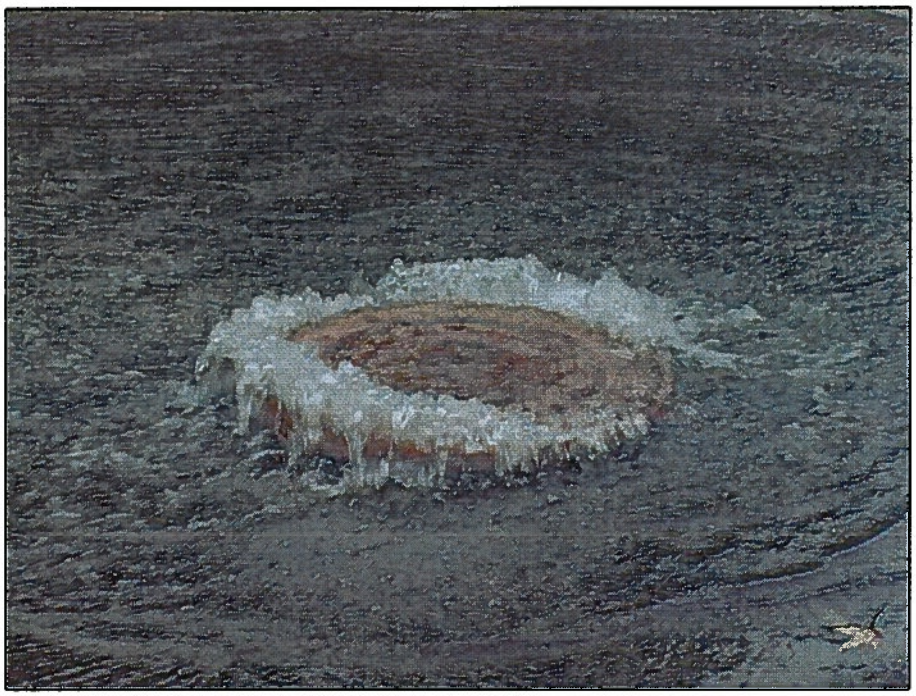

Flow (GPM)	Approximate Height of Discharge from Manhole Rim (in)	Approximate Depth of Flow on Pavement (in)	Approximate Width of Flow 10' Down from Overflow (ft)	Notes
1500	5.0 - 6.0	< .50	18.0	Slope - 1.5% over asphalt MH Cover: 124 lbs, 23.5" dia

APPROXIMATELY 2,300 GPM

Flow (GPM)	Approximate Height of Discharge from Manhole Rim (in)	Approximate Depth of Flow on Pavement (in)	Approximate Width of Flow 10' Down from Overflow (ft)	Notes
2300	6.0 - 6.5	< .50	19.0 - 20.0	Slope - 1.5% over asphalt MH Cover: 124 lbs, 23.5" dia

APPROXIMATELY 3,300 GPM

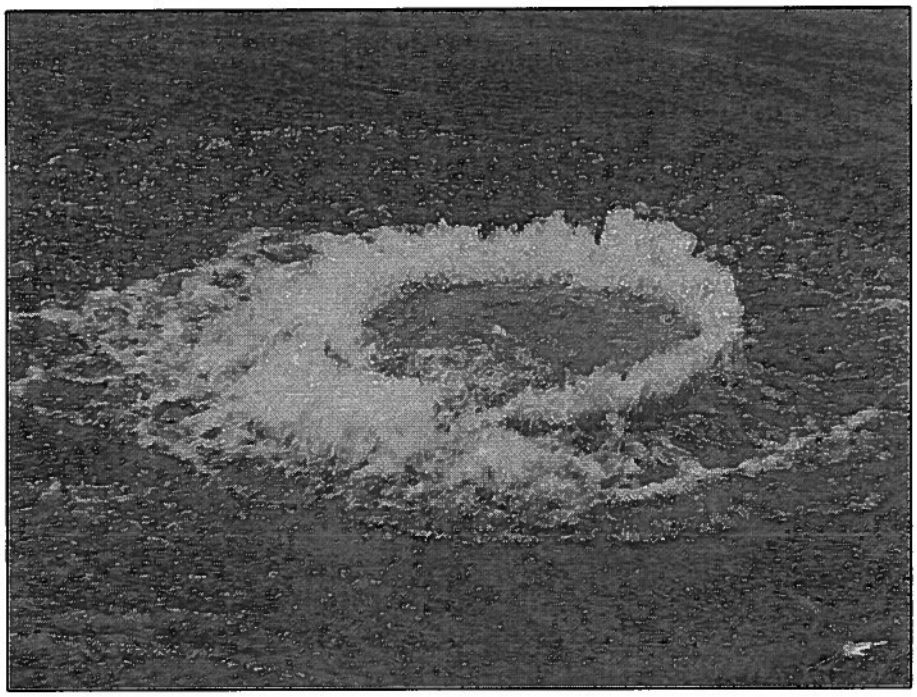

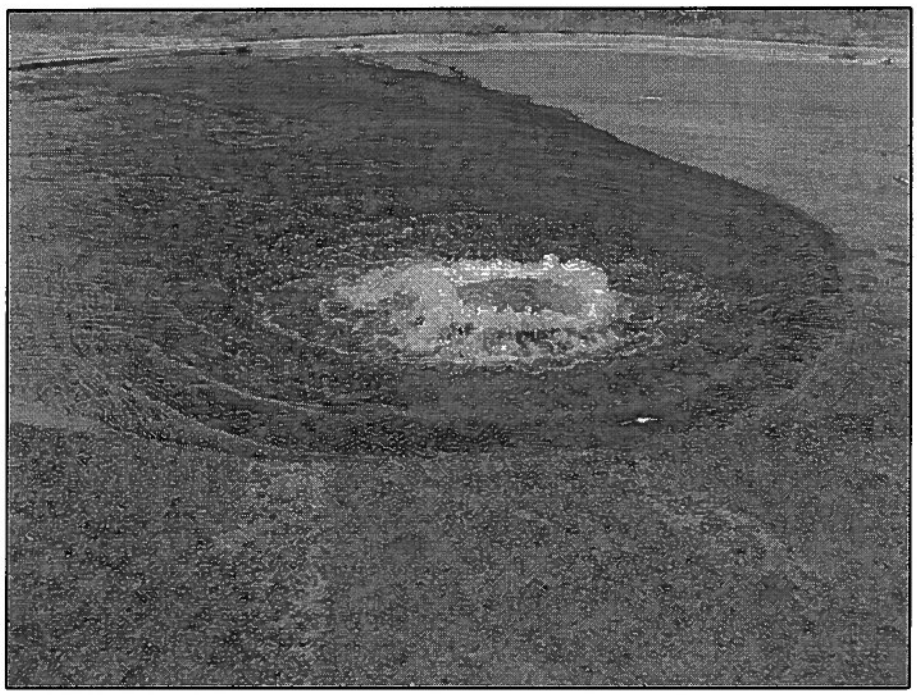

Flow (GPM)	Approximate Height of Discharge from Manhole Rim (in)	Approximate Depth of Flow on Pavement (in)	Approximate Width of Flow 10' Down from Overflow (ft)	Notes
3300	7.0 - 7.5	< .50	23.0	Slope - 1.5% over asphalt MH Cover: 124 lbs, 23.5" dia

APPROXIMATELY 4,850 GPM

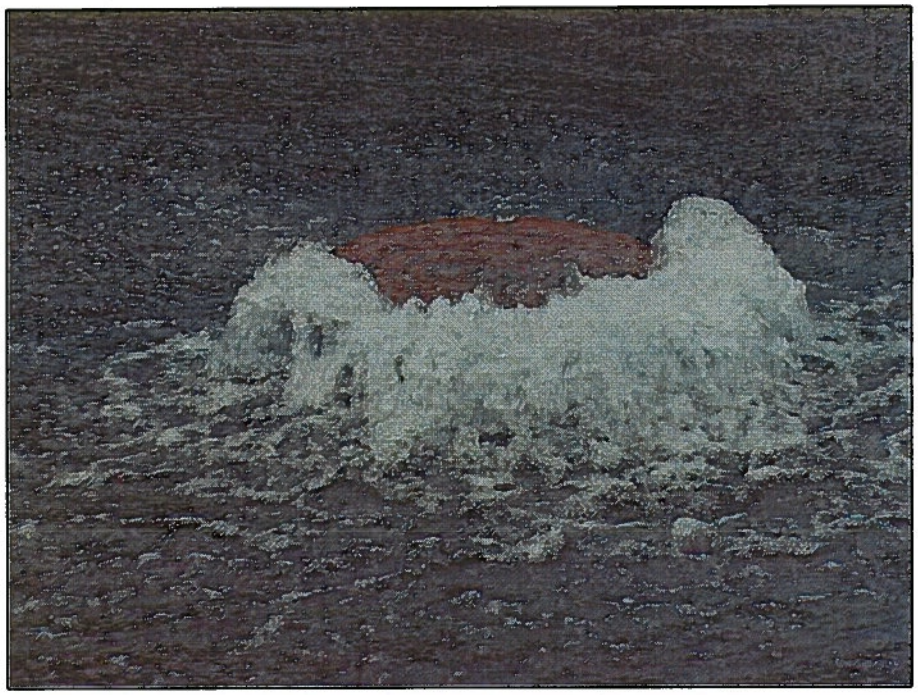

Flow (GPM)	Approximate Height of Discharge from Manhole Rim (in)	Approximate Depth of Flow on Pavement (in)	Approximate Width of Flow 10' Down from Overflow (ft)	Notes
4850	6.0 - 8.0	< .50	30.0	Slope - 1.5% over asphalt MH Cover: 124 lbs, 23.5" dia

APPROXIMATELY 550 GPM (No MH Cover)

Flow (GPM)	Approximate Height of Discharge from Manhole Rim (in)	Approximate Depth of Flow on Pavement (in)	Approximate Width of Flow 10' Down from Overflow (ft)	Notes
550	1.0 - 1.5	< 0.5	4.0 - 5.0	Slope - 1.5% over asphalt

APPROXIMATELY 1,100 GPM (No MH Cover)

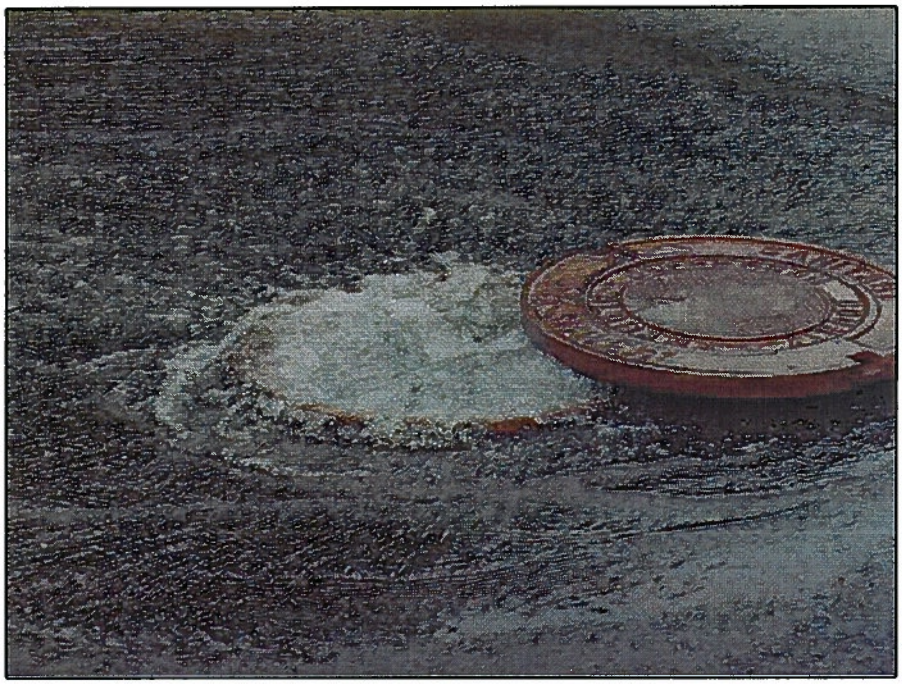

Flow (GPM)	Approximate Height of Discharge from Manhole Rim (in)	Approximate Depth of Flow on Pavement (in)	Approximate Width of Flow 10' Down from Overflow (ft)	Notes
1100	1.0 - 1.5	< 0.5	6.0 - 7.0	Slope - 1.5% over asphalt

APPROXIMATELY 2,100 GPM (No MH Cover)

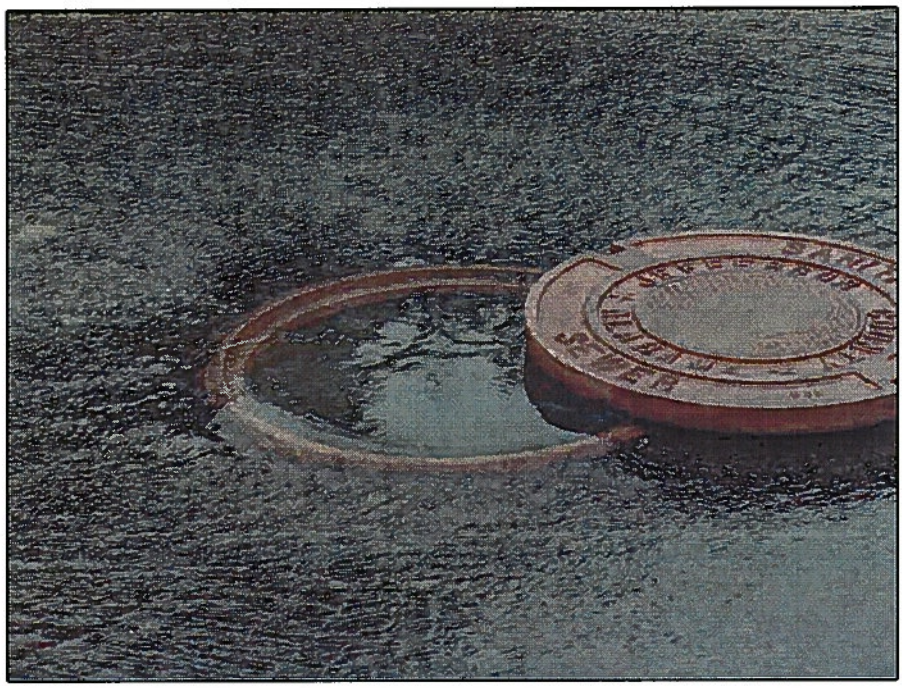

Flow (GPM)	Approximate Height of Discharge from Manhole Rim (in)	Approximate Depth of Flow on Pavement (in)	Approximate Width of Flow 10' Down from Overflow (ft)	Notes
2100	0.75 - 1.25	< 0.5	15.0 - 20.0	Slope - 1.5% over asphalt

APPROXIMATELY 3,800 GPM (No MH Cover)

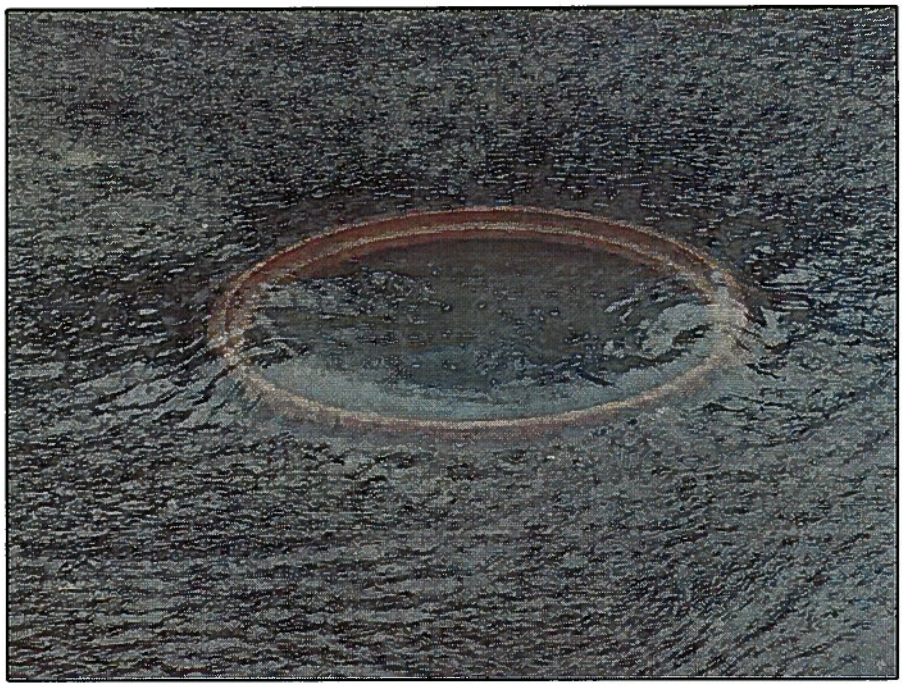

Flow (GPM)	Approximate Height of Discharge from Manhole Rim (in)	Approximate Depth of Flow on Pavement (in)	Approximate Width of Flow 10' Down from Overflow (ft)	Notes
3800	1.5	< 0.5	20.0 - 25.0	Slope - 1.5% over asphalt

APPROXIMATELY 4,850 GPM (No MH Cover)

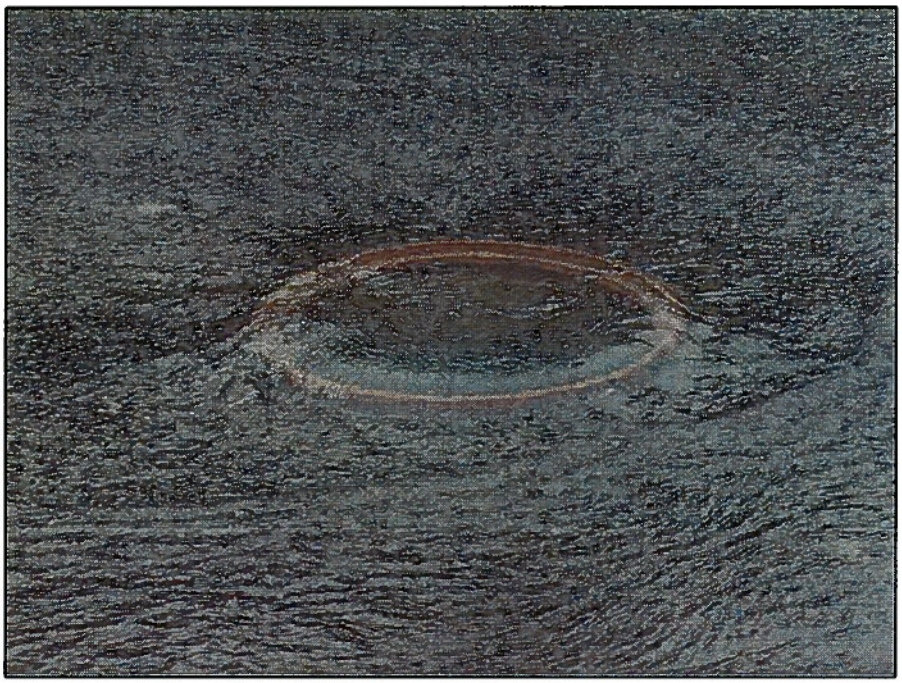

Flow (GPM)	Approximate Height of Discharge from Manhole Rim (in)	Approximate Depth of Flow on Pavement (in)	Approximate Width of Flow 10' Down from Overflow (ft)	Notes
4850	2.0	< 0.5	25.0 – 30.0	Slope - 1.5% over asphalt

CHAPTER 3

SEWER USE ORDINANCE[1]

SECTION

18-301. Title.
18-302. Administration.
18-303. Abbreviations.
18-304. Definitions.
18-305. Use of public sewers required.
18-306. Private sewage disposal.
18-307. Building sewers and connections.
18-308. Prohibitions and limitations on wastewater discharge.
18-309. Control of prohibited wastes.
18-310. Wastewater discharge permits, generally.
18-311. Wastewater discharge permit revocation.
18-312. Reporting requirements.
18-313. Wastewater sampling and analysis.
18-314. Compliance monitoring.
18-315. Confidential information.
18-316. Publication of users in significant noncompliance.
18-317. Enforcement procedures.
18-318. Industrial waste surcharge.
18-319. Validity.

18-301. **Title**. This ordinance shall be known and designated as the "sewer use ordinance." (1969 Code, § 25-30, replaced by Ord. #2-09, Jan. 2009, repealed by Ord. #4-09, March 2009, and replaced by Ord. #5-09, March 2009)

18-302. **Administration**. Except as otherwise provided herein, the city manager shall administer, implement, and enforce the provisions of this ordinance. Any powers granted to or duties imposed upon the city manager may be delegated by the city manager to a duly authorized municipal employee. (1969 Code, § 25-31, as amended by Ord. #2-05, March 2005, replaced by Ord. #2-09, Jan. 2009, repealed by Ord. #4-09, March 2009, and replaced by Ord. #5-09, March 2009)

18-303. **Abbreviations**. The following abbreviations, when used in this ordinance, shall have the meanings designated as follows:

(1) BOD - Biochemical Oxygen Demand

---

[1]Municipal code reference
Plumbing code: title 12.

(2) BMR - Baseline Monitoring Report
(3) CFR - Code of Federal Regulation
(4) CIU - Categorical Industrial User
(5) COD - Chemical Oxygen Demand
(6) EPA - U.S. Environmental Protection Agency
(7) gpd - gallons per day
(8) IU - Industrial User
(9) mg/l - milligrams per liter
(10) NPDES - National Pollutant Discharge Elimination System
(11) NSCIU - Non-Significant Categorical Industrial User
(12) POTW - Publicly Owned Treatment Works
(13) RCRA - Resource Conservation and Recovery Act
(14) SIU - Significant Industrial User
(15) SNC - Significant Non-Compliance
(16) TSS - Total Suspended Solids
(17) TTO - Total Toxic Organics
(18) USC - United States Code (1969 Code, § 25-32, as replaced by Ord. #2-09, Jan. 2009, repealed by Ord. #4-09, March 2009, and replaced by Ord. #5-09, March 2009)

18-304. Definitions. Unless the context specifically indicates otherwise, the meaning of terms used in this ordinance shall be as follows:

(1) "Act" or "the Act" means the Federal Water Pollution Control Act, also known as the Clean Water Act of 1977.

(2) "The approval authority" means the State of Tennessee, Department of Environment and Conservation, Division of Water Pollution Control or any authorized representative.

(3) "Authorized representative of industrial user" means:

(a) If the user is a corporation:

(i) The president, secretary, treasurer, or a vice-president of the corporation in charge of a principal business function, or any other person who performs similar policy or decision-making functions for the corporation; or

(ii) The manager of one (1) or more manufacturing, production, or operating facilities, provided the manager is authorized to make management decisions that govern the operation of the regulated facility including having the explicit or implicit duty of making major capital investment recommendations, and initiate and direct other comprehensive measures to assure long-term environmental compliance with environmental laws and regulations; can ensure that the necessary systems are established or actions taken to gather complete and accurate information for individual wastewater discharge permit requirements; and where authority to sign documents has been

assigned or delegated to the manager in accordance with corporate procedures.

(b) If the user is a partnership or sole proprietorship: a general partner or proprietor, respectively.

(c) If the user is a federal, state or local governmental facility: a director or highest official appointed or designated to oversee the operation and performance of the activities of the government facility, or their designee.

(d) The individuals described in subsections (a)(i) and (a)(ii) above may designate a duly authorized representative if the authorization is in writing, the authorization specifies the individual or position responsible for the overall operation of the facility from which the discharge originates or having overall responsibility for environmental matters for the company, and the written authorization is submitted to the city.

(4) "BOD" used in sewage or industrial waste shall designate its bio-chemical oxygen demand and shall mean the quantity of oxygen utilized in the bio-chemical oxidation of the organic matter of said sewage of industrial wastes under standard laboratory procedure in five (5) days at twenty degrees Celsius (20° C), expressed in milligrams per liter. It shall be determined by one of the acceptable methods described in 40 CFR part 136.

(5) "Building sewer" means a sewer conveying wastewater from the premises of a user to the POTW (see (39)). A building sewer ends at the tap on the city main sewer transition main.

(6) "Categorical industrial user" means any discharger subject to categorical pretreatment standards under 40 CFR chapter I, subchapter N (see (10)).

(7) "Categorical pretreatment standard or categorical standard" means any regulation containing pollutant discharge limits promulgated by EPA in accordance with sections 307(b) and (c) of the Act (33 USC section 1317) that apply to a specific category of users and that appear in 40 CFR chapter I, subchapter N, parts 405-471.

(8) "City" means the City of Oak Ridge acting as a municipal corporation under the laws of the State of Tennessee or the City Council of Oak Ridge, acting through the city manager.

(9) "City manager" means the City Manager of the City of Oak Ridge.

(10) "Code of Federal Regulations or CFR" means the publication of the same name by the Office of the Federal Register, National Archives and Records Administration containing a codification of the general and permanent rules published in the federal register by executive department and agencies of the federal government. The code of federal regulations is prima facie evidence of the text of the original documents. Cites to the document are as follows: XX CFR YYY where XX represents the title and YYY representing chapter and section

within that title. CFR documents are available from the superintendent of Documents, US Government Printing Office, Washington, DC 20402.

(11) "Control authority" means the City of Oak Ridge, Tennessee acting through the city manager or the city manager's authorized representative.

(12) "Customer" means any individual, firm, company, association, society, corporation or group who is the beneficiary of the water and sewer service or who is utilizing the water and/or sewer system of the City of Oak Ridge.

(13) "Daily maximum" means the arithmetic average of all effluent samples for a pollutant (except pH) collected during a calendar day.

(14) "Daily maximum limit" means the maximum allowable discharge limit of a pollutant during a calendar day. Where daily maximum limits are expressed in units of mass, the daily discharge is the total mass discharged over the course of the day. Where daily maximum limits are expressed in terms of a concentration, the daily discharge is the arithmetic average measurement of the pollutant concentration derived from all measurements taken that day.

(15) "Garbage" means solid wastes from the preparation, cooking and dispensing of food and from the handling, storage and sale of produce.

(16) "Grab sample" means a sample that is taken from a wastestream without regard to the flow in the wastestream and over a period of time not to exceed fifteen (15) minutes.

(17) "Holding tank waste" means any waste from holding tanks such as vessels, chemical toilets, campers, trailer, septic tanks, and vacuum-pump tank trucks.

(18) "Indirect discharge" means the discharge or introduction of non-domestic pollutants from any source regulated under section 307(b) or (c) of the Act, (33 USC 1317), into the POTW (including holding tank waste discharged into the system) for treatment before direct discharge to the waters of the State of Tennessee.

(19) "Industrial user" means a source of indirect discharge which does not constitute a "discharge of pollutants" under regulation issued pursuant to section 402 of the Act.

(20) "Industrial wastewater" means the wastewater from industrial processes, trade, or business as distinct from domestic or sanitary wastes.

(21) "Instantaneous limit" means the maximum concentration of a pollutant allowed to be discharged at any time, determined from the analysis of any discrete or composited sample collected, independent of the industrial flow rate and the duration of the sampling event.

(22) "Interference" means a discharge that, alone or in conjunction with a discharge or discharges from other sources, inhibits or disrupts the POTW, its treatment processes or operations or its sludge processes, use or disposal; or exceeds the design capacity of the treatment works or the collection system.

(23) "Local limit" means specific discharge limits developed and enforced by the city upon industrial or commercial facilities to implement the

general and specific discharge prohibitions listed in Tennessee Rule 1200-4-14-.05(1)(a) and (2).

(24) "May" is permissive.

(25) "Medical waste" means isolation wastes, infectious agents, human blood and blood products, pathological wastes, sharps, body parts, contaminated bedding, surgical wastes, potentially contaminated laboratory wastes, and dialysis wastes.

(26) "Monthly average" means the sum of all "daily discharges" measured during a calendar month divided by the number of "daily discharges" measured during that month.

(27) "Monthly average limit" means the highest allowable average of "daily discharges" over a calendar month, calculated as the sum of all "daily discharges" measured during a calendar month divided by the number of "daily discharged" measured during that month.

(28) "National pretreatment standards" means any regulation containing pollutant discharge limits promulgated by the EPA and in accordance with section 307(b) and (c) of the Act (33 USC 1317) which applies to the industrial users.

(29) "NPDES permit" means the National Pollutant Discharge Elimination System as defined in section 402 of the Federal Water Pollution Control Act Amendments of 1972 (Public Law 92-500).

(30) "New source" means:

(a) Any building, structure, facility, or installation from which there is (or may be) a discharge of pollutants, the construction of which commenced after the publication of proposed pretreatment standards under section 307(c) of the Act that will be applicable to such source if such standards are thereafter promulgated in accordance with that section, provided that:

(i) The building, structure facility, or installation is constructed at a site at which no other source is located; or

(ii) The building, structure, facility, or installation totally replaces the process or production equipment that causes the discharge of pollutants at an existing source; or

(iii) The production of wastewater generating processes of the building, structure, facility, or installation are substantially independent of an existing source at the same site. In determining where these are substantially independent, factors such as the extent to which the new facility is integrated with the existing plant, and the extent to which the new facility is engaged in the same general type of activity as the existing source, should be considered.

(b) Construction on a site at which an existing source is located results in a modification rather than a new source if the construction does not create a new building, structure, facility, or installation meeting the

criteria of (a)(ii) or (a)(iii) above but otherwise alters, replaces, or adds to existing process or production equipment.

(c) Construction of a new source as defined under this section has commenced if the owner or operator has:

(i) Begun, or caused to begin, as part of a continuous onsite construction program

(A) Any placement, assembly, or installation of facilities or equipment; or

(B) Significant site preparation work including clearing, excavation, or removal of existing building, structures or facilities which is necessary for the placement, assembly, or installation of new source facilities or equipment; or

(ii) Entered into a binding contractual obligation for the purchase of facilities or equipment which are intended to be used in its operation within a reasonable time. Options to purchase or contracts which can be terminated or modified without substantial loss, and contracts for feasibility, engineering and design studies do not constitute a contractual obligation under this section.

(31) "Noncontact cooling water" means water used for cooling that does not come into direct contact with any raw material, intermediate product, waste product, or finished product.

(32) "Pass through" means a discharge which exits the POTW into waters of the United States in quantities or concentrations which, alone or in conjunction with a discharge or discharges from other sources, is a cause of a violation of any requirement of the city's NPDES permit, including an increase in the magnitude or duration of a violation.

(33) "Person" means any individual, partnership, co-partnership, firm, company, corporation, association, joint stock company, trust, estate, government entity, or other legal entity, or legal representative, agents or assigns. The masculine gender shall mean to include the feminine, the singular shall include the plural where indicated by the context.

(34) "pH" means a measure of the acidity or alkalinity of a solution, expressed in standard units.

(35) "Pollutant" means dredged spoil, solid waste, incinerator residue, filter backwash, sewage, garbage, sewage sludge, munitions, medical wastes, chemical wastes, biological materials, radioactive materials, heat, wrecked or discarded equipment, rock, sand, cellar dirt, municipal, agricultural and industrial wastes, and certain characteristics of wastewater (e.g., pH, temperature, TSS, turbidity, color, BOD, COD, toxicity, or odor).

(36) "Pretreatment" means the reduction of the amount of pollutants, the elimination of pollutants, or the alteration of the nature of pollutant properties in wastewater prior to, or in lieu of, introducing such pollutants into the POTW. This reduction or alteration can be obtained by physical, chemical,

or biological processes; by process changes; or by other means, except by diluting the concentration of the pollutants unless allowed by an applicable pretreatment standard.

(37) "Pretreatment requirements" means any substantive or procedural requirement related to pretreatment imposed on a user, other than a pretreatment standard.

(38) "Pretreatment standards" means all applicable rules and regulations contained in the code of federal regulations as published in the federal register, under section 307 of Public Law 92-500 and in the Tennessee Pretreatment Requirements, chapter 1200-4-14.

(39) "Publicly Owned Treatment Works or POTW" means a treatment works as defined by section 212 of the Act, which is owned in this instance by the City of Oak Ridge. This definition includes any sewer that conveys wastewater to the treatment works.

(40) "Sewage" means a combination of the water-carried wastes from residences, business buildings, institutions and industrial establishments, together with such ground, surface and storm water as may be present.

(41) "Shall" is mandatory.

(42) "Significant industrial user" means: (a) A significant industrial user means:

(i) An industrial user subject to categorical pretreatment standards; or

(ii) An industrial user that:

(A) Discharges an average of twenty-five thousand (25,000) gpd or more of process wastewater to the POTW (excluding sanitary, noncontact cooling and boiler blowdown wastewater);

(B) Contributes a process wastestream which makes up five percent (5%) or more of the average dry weather hydraulic or organic capacity of the POTW treatment plant; or

(C) Is designated as such by the city on the basis that it has a reasonable potential for adversely affecting the POTW's operation or for violating any pretreatment standard or requirement.

(b) The city may determine that an industrial user subject to categorical pretreatment standards is a non-significant categorical industrial user rather than a significant industrial user on a finding that the industrial user never discharges more than one hundred (100) gallons per day (gpd) of total categorical wastewater (excluding sanitary, non-contact cooling and boiler blowdown wastewater, unless specifically included in the pretreatment standard) and the following conditions are met:

(i) The industrial user, prior to city's finding, has consistently complied with all applicable categorical pretreatment standards and requirements;

(ii) The industrial user annually submits the certification statement required in § 18-313(5)(b) (see Tennessee Rule 1200-4-14-.12(17)], together with any additional information necessary to support the certification statement; and

(iii) The industrial user never discharges any untreated concentrated wastewater.

(c) Upon a finding that a user meeting the criteria in subsection (a)(ii) of this part has no reasonable potential for adversely affecting the POTW's operation or for violating any pretreatment standard or requirement, the city may at any time, on its own initiative or in response to a petition received from an industrial user, and in accordance with procedures in Tennessee Rule 1200-4-14-.08(6)(f), determine that such user should not be considered a significant industrial user.

(43) "Slug load or slug discharge" means any discharge at a flow rate or concentration, which could cause a violation of the prohibited discharge standards in § 18-308 of this ordinance. A slug discharge is any discharge of a non-routine, episodic nature, including but not limited to an accidental spill or a non-customary batch discharge, which has a reasonable potential to cause interference or pass through, or in any other way violate the POTW's regulations, local limits or permit conditions.

(44) "Standard methods" means the testing methods approved for use in 40 CFR 136 as appropriate.

(45) "Storm water" means any flow occurring during or immediately following any form of natural precipitation and resulting therefrom.

(46) "Superintendent" means the city manager or the city manager's designee primarily responsible for wastewater discharges.

(47) "Total suspended solids or suspended solids" means the total suspended matter that floats on the surface of, or is suspended in, water, wastewater, or other liquid, and that is removable by laboratory filtering.

(48) "Toxic pollutant" means any pollutant or combination of pollutants listed as toxic in the regulations promulgated by the administrator or Environmental Protection Agency under the provisions of 33 USC 1317.

(49) "User" means any person discharging wastes to the City of Oak Ridge POTW.

(50) "Waste" means any waste, including sewage and any other waste substances, liquid, solid, or gases that are radioactive, associated with human habitation, or human or animal origin, or from any producing, manufacturing, or processing operation or whatever nature, including such waste placed within containers of whatever nature prior to, and for purposes of disposal.

(51) "Wastewater" means liquid and water-carried industrial wastes and sewage from residential dwellings, commercial buildings, industrial and

manufacturing facilities, and institutions, whether treated or untreated, which are contributed to the POTW.

(52) "Miscellaneous terms" means terms not otherwise defined herein shall be defined as shown in the latest edition of Standard Methods for the Examination of Water and Wastewater or other appropriate federal or state guidelines and regulations. (1969 Code, § 25-33, as replaced by Ord. #2-09, Jan. 2009, repealed by Ord. #4-09, March 2009, and replaced by Ord. #5-09, March 2009)

18-305. Use of public sewers required. (1) Disposal of waste. It shall be unlawful for any person to place, deposit, or permit to be deposited on public or private property within the City of Oak Ridge any human or animal excrement or other objectionable waste in such a manner to create a public nuisance or to create a threat or danger to the public health and safety. This section shall not apply to the depositing of animal excrement by livestock or through other generally accepted agricultural activities, nor to the depositing of excrement from household pets, provided such excrement is not deposited nor allowed to accumulate to such an extent as to cause a public nuisance or otherwise to constitute a threat or danger to the public health or safety, and provided further that it shall be unlawful to place, deposit, or to permit to be deposited upon the property of another within the City of Oak Ridge human or animal excrement or other objectionable waste in any amount without the permission of the owner of such property.

(2) Direct discharge prohibited. It shall be unlawful to discharge to any natural outlet within the City of Oak Ridge, or any area under the jurisdiction of said city, any sewage or other polluted waters, except where a federal or state discharge permit has been duly issued and is currently valid for such discharge.

(3) New private disposal systems prohibited. Except as hereinafter provided or as otherwise permitted by ordinance or regulation, it shall be unlawful to construct or maintain any privy, privy vault, septic tank, cesspool, or other private facility intended or used for the disposal of sewage.

(4) City's right to require sanitary facilities. The owner, tenant or occupant of all houses, buildings, improvements or properties used for residential, commercial, industrial or recreational and all other human occupancy purposes which abut upon a street, road, right-of-way or other public way containing a public sanitary sewer shall upon demand by the city install suitable toilet facilities therein and connect the same directly with the proper public sewer in accordance with the provisions of this ordinance and shall cease to use any other means for the disposal of sewage, waste, wastewater, and other polluting matter, provided however the city may waive such requirement in specific cases where it has determined that public sewer service to any particular individual user(s) would be unduly difficult or expensive and that alternative measures of disposal would not be hazardous to public health.

(5) City's right to require sewer hookup. The owner, tenant or occupant of all houses, buildings, improvements or properties used for residential, commercial, industrial or recreational and all other human occupancy purposes which abut upon a street, road, right-of-way or other public way containing a public sanitary sewer shall upon demand by the city connect such house, building, improvement or property with the proper public sewer in accordance with the provisions of this ordinance and shall cease to use any other means for disposal of sewage, waste, wastewater or other polluting matter, provided however the city may waive such requirements in specific cases where it has determined that public sewer service to any particular individual user(s) would be unduly difficult or expensive and that alternative measures of disposal would not be hazardous to public health.

(6) Disposal of private waste by truck. The superintendent shall designate the locations and times where vacuum or "cess pool" trucks may be discharged, and may refuse to accept any truckload of waste in his absolute discretion where it appears that the waste could interfere with the effective operation of the treatment works or any sewer line or appurtenance thereto. The owner or operator of a truck shall upon request, provide manifest to the POTW that states the source of the domestic waste they wish to discharge, the volume of wastewater from each source, and whether any industrial waste is included in the wastewater.

(7) Holding tanks. No person shall discharge any other holding tank waste into the POTW unless he shall have applied for and have been issued a permit by the superintendent. Unless otherwise allowed under the terms and conditions of the permit, a separate permit must be secured for each separate discharge. The permit shall state the specific location of discharge, the time of day the discharge is to occur, the volume of the discharge, and shall limit the wastewater constitutes and characteristic of the discharge. Such user shall pay any applicable charges or fees therefore, and shall comply with the conditions of the permit issued by the superintendent. Provided, however, no permit shall be required to discharge domestic waste from a recreational vehicle holding tank provided such discharge is made into an approved facility designed to receive such waste. (1969 Code, § 25-34, as replaced by Ord. #2-09, Jan. 2009, repealed by Ord. #4-09, March 2009, and replaced by Ord. #5-09, March 2009)

18-306. Private sewage disposal. The disposal of sewage by means other than the use of the available public sanitary sewage system shall be in accordance with local, county and state law. The disposal of sewage by private disposal systems shall be permissible only in those instances where service from the available public sanitary sewer system is not available, or where such is otherwise permitted by city ordinance or regulations. (1969 Code, § 25-35, as replaced by Ord. #2-09, Jan. 2009, repealed by Ord. #4-09, March 2009, and replaced by Ord. #5-09, March 2009)

18-307. Building sewers and connections. (1) Connections of building sewers to POTW. No unauthorized person shall uncover, make any connections with or opening into, use, alter, or disturb any public sanitary sewer or appurtenance thereof without first obtaining a written permit from the control authority. The owner or his agent shall make application on a special form furnished by the city. The permit application shall be supplemented by any plans, specifications, or other information considered pertinent in the judgment of the control authority.

(2) Cost of installation. All costs and expenses incident to the installation and connection of the building sewer shall be borne by the property owner. The property owner shall indemnify the city from any loss or damage that may directly or indirectly be occasioned by the installation of the building sewer.

(3) Separate sewers required. A separate and independent building sewer shall be provided for every building.

(4) Old building sewers. Old building sewers may be used in connection with new buildings only when they are found, upon examination and test by the city, to meet all requirements of this ordinance.

(5) Construction controls for new sewers. The size, slope, alignment, materials of construction of a building sewer, and the methods to be used in excavating, placing of the pipe, jointing, testing, and back filling the trench, shall all conform to the requirements of the building and plumbing code or other applicable rules and regulations of the city. In the absence of code provisions or in amplification thereof, the materials and procedures set forth in appropriate specifications of the International Plumbing Code and the International Residential Code shall apply.

(6) Sewer entrances to private facilities. Whenever possible, the building sewer shall be brought to the building at an elevations below the basement floor. In all buildings in which any building drain is too low to permit gravity flow to the public sewer, sanitary sewage carried by such building drain shall be lifted by an approved means and discharged to the building sewer.

(7) Extraneous water prohibited. No person shall make connection of roof down spouts, exterior foundation drains, areaway drains, or other sources of surface runoff or groundwater to a building sewer or building drain which in turn is connected directly or indirectly to a public sanitary sewer. Exceptions may be made only if such connection is approved by the superintendent for purpose of disposal of polluted surface drainage or ground water. Such connections, if approved, will require a wastewater discharge permit.

(8) Quality of construction. All connections to the city system shall be made gas tight and watertight. Any deviations from the prescribed procedures and materials must be approved by the control authority before installation.

(9) Inspection of sewers. The applicant for the building sewer permit shall notify the control authority or his representative when the building sewer

is ready for inspection and connection to the public sewer. The connection shall be made by or under the supervision of the control authority.

(10) Excavation safety. All excavations for building sewer installation shall be adequately guarded with barricades and lights so as to protect the public. Property disturbed in the course of the work shall be restored in a manner satisfactory to the city.

(11) Condition of private sewers. Users shall be responsible for the integrity of building sewers on his property. If it is determined that these lines are faulty or in a bad state of repair, such that extraneous storm water can enter the POTW, the city may require the customer to repair his pipes. If the pipes are not repaired within the time period allowed by the city, service shall be terminated.

(12) Grease traps. All cafes, restaurants, motels, hotels, or other commercial food preparation establishments shall install a grease trap on the kitchen waste line, provided however, all existing cafes, restaurants, motels, hotels, or other commercial food preparation establishments shall be required to construct a grease trap, at the owner's expense within ninety (90) days after notification by the city, if and when the control authority determines that a grease problem exists which is capable of causing damage or operational problems to structures or equipment in the city sewer system, or if such is otherwise required by city ordinance, state or federal law. The city shall retain the right to inspect and approve installation of the grease trap facility. The grease trap must precede the septic tank on the kitchen waste line if a septic tank is used. The grease trap must be designed in accordance with current engineering standards and shall be easily accessible for cleaning. Grease traps shall be maintained by the owner or operator of the facility so as to prevent a stoppage of the city sewer. If the city employees are required to clean out the city sewer lines as a result of a stoppage resulting from a clogged grease trap, the property owner or operator shall be required to pay the costs of the city labor and materials required to clean out the sewer lines. The installation of grease traps shall be in accordance with § 18-307(2) of this ordinance.

(13) Alteration to and obstruction to city sewers. No person shall obstruct entrance to or operation of the city sanitary sewer system. Existing manholes are to be kept uncovered and accessible at all times. In the event that construction involving the filling of an area around a manhole occurs, the owner of the property, or the person causing the construction to be accomplished shall bear all costs associated with the required adjustment of the sewer manholes. Filling or grading of a property such that storm water concentrates at a manhole will not be permitted. The city reserves the right to enter onto its easements at all times to maintain its system and to remove or cause to be removed all obstructions to said entrance, and furthermore to assess the costs of the removal of obstructions against the owner thereof.

(14) Maintenance of building sewers. The owner of a building sewer is responsible for the maintenance (and replacement, if required) of the building sewer from his building to either:

(a) The tap on the city main sewer lines; or

(b) The point of confluence with flow from buildings owned by another owner; whichever is shorter.

Should the building sewer cross a public right-of-way before entering the main line sewer, the property owner is responsible for maintenance of the line to the main line; however, should city owned facilities, such as sidewalks, curbs, gutters, or streets be disturbed by the repair of the building sewer, the city will repair said improvements as are reasonable disturbed by the work at no cost to the owner of the property. Operations in a public right-of-way require written permission of the city and proper safety provisions including but not limited to traffic control as outlined in the Manual of Uniform Traffic Control adopted by the State of Tennessee. (1969 Code, § 25-36, as replaced by Ord. #2-09, Jan. 2009, repealed by Ord. #4-09, March 2009, and replaced by Ord. #5-09, March 2009)

18-308. Prohibitions and limitations on wastewater discharge. (1) Requirements of wastewater permits. (a) No person shall discharge or cause to be discharged into the City of Oak Ridge POTW any wastewater other than domestic sewage resulting from normal human habitation including food preparation activities unless he holds a wastewater discharge permit as defined in § 18-310 of this ordinance. This section shall not apply to existing sources until they are notified of its requirement in writing.

(b) Persons discharging radionuclides only in addition to domestic sewage are required to obtain a wastewater treatment permit unless:

(i) Material discharged is characterized by a half-life of less than ten (10) days, and a lack of significant alpha activity; and

(ii) At no point along the collection system is activity more than double background levels at the surface with all manholes closed and the system functioning normally; and

(iii) No more than five hundred (500) microcuries of material are discharged per hour measured at the point of discharge into the wastewater collection system to a maximum of three thousand five hundred (3,500) microcuries per day.

It is the responsibility of the discharging party to arrange for verification of these limits within five (5) days of a written request to do so by the city.

(c) The control authority may waive the requirements for a wastewater discharge permit on a case-by-case basis for dischargers whose effluent does not violate the criteria for domestic sewage as

established by the controlling agency and who, furthermore, are not categorical users. Notwithstanding the following, existing non-permitted dischargers or dischargers who have had the permit requirement waived may be required to obtain a discharge permit upon sixty (60) days notification by the controlling authority based on the observed character of the user's operations or his waste stream or suspected impact on the POTW or other factors which the control authority may define.

(d) In order to avoid wastewater influent to the treatment plant which creates adverse effects, or interferes with any wastewater treatment or collection processes, or creates any hazard in receiving waters or results in the city being in violation of applicable effluent standards including sludge disposal standards, the control authority shall establish and amend wastewater effluent limits as deemed necessary. Limits for certain parameters are set as protection criteria for the POTW. Discharge limits for industrial users will be set in discharge permits as outlined in § 18-310 of this ordinance. Such limits will be calculated based on the anticipated ability of the plant to absorb specific wastewater constituents without violation of its NPDES permit, safety of the public, and/or disruption of plant operations including sludge disposal; not to exceed, however, federal limits where applicable.

(e) Dilution. No user shall ever increase the use of process water, or in any way attempt to dilute a discharge, as a partial or complete substitute for adequate treatment to achieve compliance with a discharge limitation unless expressly authorized by an applicable pretreatment standard or requirement. The superintendent may impose mass limitations on users who are using dilution to meet applicable pretreatment standards or requirements, or in other cases when the imposition of mass limitations is appropriate.

(2) Prohibitions on wastewater discharge. Regardless of permit status, no person shall discharge or cause to allow to be discharged into the City of Oak Ridge POTW or any connected treatment facilities any waste which contains any of the following:

(a) Oils and grease. Fats, wax, grease or oils of animal or vegetable origin in concentrations of greater than one hundred (100) mg/l, whether emulsified or not, or containing substances which may solidify or become viscous at temperatures between thirty-two (32) degrees and one hundred fifty (150) degrees F (zero (0) degrees and sixty-five (65) degrees C) at the point of discharge into the system.

(b) Explosive mixtures. Liquids, solids, or gases which by reason of their nature or quantity are, or may be, sufficient to cause a fire or explosion hazard or be injurious in any other way to the POTW or to the operation of the system. At no time shall two (2) successive readings on an explosion hazard meter, at the point of discharge into the sewer system, be more than five percent (5%) nor any single reading over ten

percent (10%) of the Lower Explosive Limit (LEL). Wastestreams with a closed cup flashpoint of less than one hundred forty (140) degrees Fahrenheit or sixty (60) degrees Centigrade using the test methods specified in 40 CFR 261.21. Prohibited materials included, but are not limited to, gasoline, kerosene, naphtha, benzene, toluene, xylene, ethers, alcohols, ketones, aldehydes, peroxides, chlorates, perchlorates, bromates, carbides, hydrides and sulfides.

(c) Noxious materials. Noxious or malodorous solids, liquids or gases, which, either singly or by interaction with other wastes, are capable of creating a public nuisance or hazard to life, or are or may be sufficient to prevent entry into a sewer for its maintenance and repair.

(d) Improperly shredded garbage. Garbage that has not been ground or comminuted to such a degree that all particles are one-half inch (1/2") or less in greatest dimension and will be carried freely in suspension under flow conditions normally prevailing in the public sewers.

(e) Radioactive wastes. Radioactive wastes or isotopes of such half-life or concentration that they are in noncompliance with regulations issued by the appropriate authority having control over their use and which will or may cause damage or hazards to the POTW or personnel operating the system.

(f) Solids or viscous wastes. Solid or viscous waters which will or may cause obstruction to the flow in a sewer, or other interference with the proper operation of the POTW. Prohibited materials include, but are not limited to, grease, uncomminuted garbage, animal guts or tissues, paunch manure, bones, hair, hides or fleshings, entrails, feathers, ashes, cinders, sand, spent lime, stone or marble dust, metal, glass, straw, shavings, grass clippings, rags, spent grains, spent hops, waste paper, wood, plastic, tar, asphalt residues, residues from refining or processing of fuel or lubricating oil, and similar substances.

(g) Excessive discharge rate. Wastewaters at a flow rate which is excessive relative to the capacity of the treatment works or which could cause a treatment process upset and subsequent loss of treatment efficiency; or wastewaters containing such concentrations or quantities of pollutants that their introduction into the treatment works would cause interference.

(h) Toxic substances. Any toxic substances, chemical elements or compounds, phenols or other taste- or odor-producing substances, or any substances in amounts which may interfere with the biological processes or efficiency of the treatment works, or that will pass through the treatment works in concentrations which would cause the POTW to exceed its NPDES permit limits.

(i) Unpolluted waters. Storm water, surface water, ground water, artesian well water, roof runoff, subsurface drainage, swimming

pool drainage, condensate, deionized water, noncontact cooling water, and unpolluted wastewater, unless specifically authorized by the superintendent.

(j) Discolored materials. Wastewater which imparts color which cannot be removed by the treatment process, such as, but not limited to, dye wastes and vegetable tanning solutions, which consequently imparts color to the treatment plant's effluent, thereby violating the city's NPDES permit.

(k) Corrosive wastes. Any waste which will cause corrosion or deterioration of the POTW. All wastes discharged to the public sewer system must have a pH value in the range of six to nine (6 – 9). Prohibited materials include, but are not limited to acids, sulfides, concentrated chloride and fluoride compounds and substances which will react with water to form acidic products.

(l) Thermal discharge. Heat in amounts which will inhibit biological activity in or cause damage to the POTW resulting in interference, but in no case heat in such quantities that the temperature at the treatment plant exceeds forty (40)°C (one hundred four (104)°F). Under no conditions may the temperature at the point of discharge exceed one hundred twenty (120)°F.

(m) Human hazard. Any wastewater which caused hazard to human life or creates a public nuisance.

(n) Wastewater causing, alone or in conjunction with other sources, the treatment plant's effluent to fail toxicity test.

(o) Detergents, surface-active agents, or other substances which that might cause excessive foaming in the POTW.

(p) Petroleum oil, non-biodegradable cutting oil, or products of mineral oil origin, in amounts that will cause interference or pass through.

(q) Pollutants which result in the presence of toxic gases, vapors, or fumes within the POTW in a quantity that may cause acute worker health and safety problems.

(3) Limitation on wastewater discharge. No person shall discharge or convey or cause to be discharged or conveyed to the public sewer any wastewater containing pollutants of such character or quantity that will:

(a) Not be amenable to treatment or reduction by the wastewater treatment processes employed, or are amenable to treatment only to such degree that the wastewater treatment plant effluent cannot meet the requirements of other agencies having jurisdiction over discharge to the receiving waters.

(b) Constitute a hazard to human or animal life or to the stream or water course receiving the treatment plant effluent.

(c) Exceed limits as set forth in his wastewater discharge permit or violate the federal pretreatment standards.

(d) Cause the treatment plant to violate its NPDES permit, pass-through limits, or other applicable receiving water standards, or cause interference with plant operations.

(e) Contain any water or wastes whose strength or other characteristics exceed the limits for normal wastewater which may be established by the control authority. (1969 Code, § 25-37, as amended by Ord. #2-05, March 2005, replaced by Ord. #2-09, Jan. 2009, repealed by Ord. #4-09, March 2009, and replaced by Ord. #5-09, March 2009)

18-309. Control of prohibited wastes. (1) National categorical pretreatment standards. Users must comply with the categorical pretreatment standards found at 40 CFR chapter I, subchapter N, parts 405 – 471.

(a) Where a categorical pretreatment standard is expressed only in terms of either the mass or the concentration of a pollutant in wastewater, the superintendent may impose equivalent concentration or mass limits in accordance with Tennessee Rule 1200-4-14-.06(3).

(b) When the limits in a categorical pretreatment standard are expressed only in terms of mass of pollutant per unit of production, the superintendent may convert the limits to equivalent limitations expressed either as mass of pollutant discharged per day or effluent concentration for purposes of calculating effluent limitations applicable to individual industrial users.

(c) When wastewater subject to a categorical pretreatment standard is mixed with wastewater not regulated by the same standard, the superintendent shall impose an alternate limit in accordance with Tennessee Rule 1200-4-14-.06(5).

(d) The superintendent may convert the mass limits of the categorical pretreatment standards of 40 CFR parts 414, 419, and 455 to concentration limits for purposes of calculating limitations applicable to individual industrial users. The conversion is at the discretion of the superintendent.

(e) Once included in its permit, the industrial user must comply with the equivalent limitations developed in this § 18-309 in lieu of the promulgated categorical standards from which the equivalent limitations were derived.

(f) Many categorical pretreatment standards specify one (1) limit for calculating maximum daily discharge limitations and a second limit for calculating maximum monthly average, or four (4) day average, limitations. Where such standards are being applied, the same production or flow figure shall be used in calculating both the average and the maximum equivalent limitation.

(g) Any industrial user operating under a permit incorporating equivalent mass or concentration limits calculated from a production-based standard shall notify the superintendent within two (2)

business days after the user has a reasonable basis to know that the production level will significantly change within the next calendar month. Any user not notifying the superintendent of such anticipated change will be required to meet the mass or concentration limits in its permit that were based on the original estimate of the long term average production rate.

(2) Tennessee Pretreatment Standards. Users must comply with Tennessee Pretreatment Standards codified at 1200-4-14.

(3) Regulatory actions. If wastewaters containing any substances in excess concentrations as described in § 18-308 of this ordinance are discharged or proposed to be discharged into the sewer system of the City of Oak Ridge or to any sewer system tributary thereto, the city shall take any action necessary to:

(a) Prohibit the discharge of such wastewater.

(b) Require a discharger to demonstrate that in-plant modifications will eliminate the discharge of such substances to a degree as to be acceptable to the city.

(c) Require pretreatment, including storage facilities or flow equalization, necessary to reduce or eliminate the objectionable characteristics or substances so that the discharge will not violate these rules and regulations or federal pretreatment standards and any other applicable requirements promulgated by the EPA in accordance with section 307 of the Clean Water Act of 1977.

(d) Require the person or discharger making, causing or allowing the discharge to pay any added cost of handling and treating excess loads imposed on the POTW. Nothing herein authorizes discharge, otherwise prohibited, upon payment of cost therefore.

(e) Discontinue sewer service to the discharger until such time as the problem is corrected.

(f) Take such other remedial action provided by law as may be deemed to be desirable or necessary to achieve the requirements of this ordinance.

(4) Submission of plans. (a) Where pretreatment or equalization of wastewater flows prior to discharge into any part of its POTW is required by the City of Oak Ridge; plans, specifications and other pertinent data or information relating to such pretreatment of flow-control facilities shall be submitted to the control authority for review and approval. Approval shall in no way exempt the discharge of such facilities from compliance with any applicable code, ordinance, rule or regulation of any governmental unit or the city. Any subsequent alterations or additions to such pretreatment or flow-control facilities shall not be made without due notice to, and approval of, the control authority.

(b) The superintendent shall evaluate whether each SIU needs an accidental discharge/slug discharge control plan or other action to

control slug discharges. The superintendent may require any user to develop, submit for approval, and implement such a plan or take such other action that may be necessary to control slug discharges. Alternatively, the superintendent may develop such a plan for any user. An accidental discharge/slug discharge control plan shall address, at a minimum, the following:

(i) Description of discharge practices, including nonroutine batch discharges;

(ii) Description of stored chemicals;

(iii) Procedures for immediately notifying the superintendent of any accidental or slug discharge, as required by § 18-309(6) of this ordinance; and

(iv) Procedures to prevent adverse impact from any accidental or slug discharge. Such procedures include, but are not limited to, inspection and maintenance of storage areas, handling and transfer of materials, loading and unloading operations, control of plant site runoff, worker training, building of containment structures or equipment, measures for containing toxic organic pollutants, including solvents, and/or measures and equipment for emergency response.

(5) Pretreatment facilities operations. If pretreatment or control of waste flows is required, such facilities shall be effectively operated and maintained by the user at his or her expense, subject to the requirements of these rules and regulations and all other applicable codes, ordinances and laws.

(6) Reporting of accidental discharges. (a) In the case of any discharge, including, but not limited to, accidental discharges, discharges of a nonroutine, episodic nature, a noncustomary batch discharge, a slug discharge or slug load, that might cause potential problems for the POTW, the user shall immediately telephone and notify the superintendent of the incident. This notification shall include the location of the discharge, type of waste, concentration and volume, if known, and corrective actions taken by the user.

(b) Within five (5) days following such discharge, the user shall, unless waived by the superintendent, submit a detailed written report describing the cause(s) of the discharge and the measures to be taken by the user to prevent similar future occurrences. Such notification shall not relieve the user of any expense, loss, damage, or other liability which might be incurred as a result of damage to the POTW, natural resources, or any other damage to person or property; nor shall such notification relieve the user of any fines, penalties, or other liability which may be imposed pursuant to this ordinance.

(c) A notice shall be permanently posted on the user's bulletin board or other prominent place advising employees who to call in the event of a discharge described in subsection (6)(a) above. Employers shall

ensure that all employees, who could cause such a discharge to occur, are advised of the emergency notification procedure.

(d) Significant industrial users are required to notify the superintendent immediately of any changes at its facility affecting the potential for a slug discharge.

(7) Right of entry. Agents of the City of Oak Ridge, the Tennessee Department of Environment and Conservation (TDEC) and/or EPA upon presentation of credentials shall be permitted to enter all properties of the contributing industry for the purpose of inspection, observation, measurement, sampling, and testing. (1969 Code, § 25-38, as replaced by Ord. #2-09, Jan. 2009, repealed by Ord. #4-09, March 2009, and replaced by Ord. #5-09, March 2009)

18-310. Wastewater discharge permits, generally. (1) Permits required. All persons proposing to connect to or discharge into the sanitary sewer system any material other than normal domestic waste shall be considered an industrial user and must obtain a wastewater discharge permit from the control authority before connecting to or discharging into the sanitary sewer. All existing industrial users connected to or discharging into the city's sanitary sewer must obtain a wastewater discharge permit within sixty (60) days after notice from the city.

(2) Permit application. (a) All users required to obtain an individual wastewater discharge permit must submit a permit application. The superintendent may require users to submit all or some of the following information as part of a permit application:

(i) Identifying information. (A) The name and address of the facility, including the name of the operator and owner.

(B) Contact information, description of activities, facilities, and plant production processes on the premises.

(ii) Environmental permits. A list of any environmental control permits held by or for the facility.

(iii) Description of operations. (A) A brief description of the nature, average rate of production (including each product produced by type, amount, processes, and rate of production), and standard industrial classifications of the operation(s) carried out by such user. This description should include a schematic process diagram, which indicates points of discharge to the POTW from the regulated processes;

(B) Types of wastes generated, and a list of all raw materials and chemicals used or stored at the facility which are, or could accidentally or intentionally be, discharged to the POTW;

(C) Number and type of employees, hours of operation, and proposed or actual hours of operation;

(D) Type and amount of raw materials processed (average and maximum per day); and

(E) Site plans, floor plans, mechanical and plumbing plans, and details to show all sewers, floor drains, and appurtenances by size, location, and elevation, and all points of discharge.

(iv) Time and duration of discharges.

(v) The location for monitoring all wastes covered by the permit.

(vi) Flow measurement. Information showing the measured average daily and maximum daily flow, in gallons per day, to the POTW from regulated process streams and other streams, as necessary, to allow use of the combined wastestream formula set out in § 18-309(1)(c) (Tennessee Rule 1200-4-14-.06(5)).

(vii) Measurement of pollutants. (A) The categorical pretreatment standards applicable to each regulated process and any new categorically regulated processes for existing sources.

(B) The results of sampling and analysis identifying the nature and concentration, and/or mass, where required by the standard or by the superintendent, of regulated pollutants in the discharge from each regulated process.

(C) Instantaneous, daily maximum, and long-term average concentrations, or mass, where required, shall be reported.

(D) The sample shall be representative of daily operations and shall be analyzed in accordance with procedures set out in § 18-313(1) of this ordinance. Where the standard requires compliance with a pollution prevention alternative, such as the certification alternative in lieu of required monitoring for TTO, the user shall submit documentation as required by the superintendent or the applicable standards to determine compliance with the standard.

(E) Sampling must be performed in accordance with procedures set out in § 18-313(2) of this ordinance.

(viii) Any requests for a monitoring waiver (or a renewal of an approved monitoring waiver) for a pollutant neither present nor expected to be present in the discharge based on § 18-312(4)(b). [See 1200-4-14-.12(5)(b)].

(ix) Any other information as may be deemed necessary by the superintendent to evaluate the permit application.

(b) Application signatories and certifications. (i) All wastewater discharge permit applications, user reports and certification statements must be signed by an authorized representative of the user and contain the certification statement in § 18-313(5)(a).

(ii) If the designation of an authorized representative is no longer accurate because a different individual or position has responsibility for the overall operation of the facility or overall responsibility for environmental matters for the company, a new written authorization satisfying the requirements of this section must be submitted to the superintendent prior to or together with any reports to be signed by an authorized representative.

(iii) A facility determined to be a non-significant categorical industrial user by the superintendent pursuant to § 18-304(42)(b) must annually submit the signed certification statement in § 18-313(5)(b) [Note: See 40 CFR 403.3(v)(2)]

Incomplete or inaccurate applications will not be processed and will be returned to the user for revision.

(3) Permit conditions. An individual wastewater discharge permit shall include such conditions as are deemed reasonably necessary by the superintendent to prevent pass through or interference, protect the quality of the water body receiving the treatment plant's effluent, protect worker health and safety, facilitate sludge management and disposal, and protect against damage to the POTW.

Wastewater discharge permits shall be expressly subject to all provisions of this ordinance and all other regulations, user charges and fees established by the city. The conditions of wastewater discharge permits shall be uniformly enforced by the city in accordance with this ordinance, and applicable state and federal regulations. Permits must contain all items required by federal regulation; and further, may include but not necessarily be limited to the following:

(a) A statement that indicates the wastewater discharge permit issuance date, expiration date and effective date;

(b) Requirements that the industrial user comply with any and all pretreatment standards and requirements either local, state or federal;

(c) A statement of non-transferability without, at a minimum, prior notification to the POTW and provision of a copy of the existing permit to the new owner or operator;

(d) The average and maximum wastewater constituents and characteristics;

(e) Effluent limits, including pollution prevention alternative, based on applicable pretreatment standards;

(f) Self monitoring, sampling, reporting, notification, and record-keeping requirements. These requirements shall include an identification of pollutants (or pollution prevention alternative) to be monitored, sampling location, sampling frequency, and sample type based on federal, state, and local law;

(g) The process for seeking a waiver from monitoring for a pollutant neither present nor expected to be present in the discharge in accordance with § 18-312(4)(b);

(h) A statement of applicable civil and criminal penalties for violation of pretreatment standards and requirements, and any applicable compliance schedule. Such schedule may not extend the time for compliance beyond that required by applicable federal, state, or local law;

(i) Requirements to control slug discharge, if determined by the superintendent to be necessary;

(j) Any grant of the monitoring waiver by the superintendent (§ 18-312(4)(b)) must be included as a condition in the user's permit;

(k) Limits on the average and/or maximum rate of discharge, time of discharge, and/or requirements for flow regulation and equalization;

(l) Requirements for installation of inspection and sampling facilities and schedules for said installation;

(m) Requirements for installation and operation of pretreatment systems or process modifications and schedule for said installations;

(n) Requirements for the development and implementation of spill control plans or other special conditions including management practices necessary to adequately prevent accidental, unanticipated, or nonroutine discharges;

(o) Requirements for maintaining plant records relating to wastewater discharge as specified by the control authority and affording the city access thereto;

(p) Requirements that the city maintain the right to enter onto the premises for inspection of operations including process areas, pretreatment areas, and any such other portions of the premises which may be deemed appropriate by the controlling authority;

(q) A statement that compliance with the individual wastewater discharge permit does not relieve the permittee of responsibility for compliance with all applicable federal and state pretreatment standards, including those which become effective during the term of the individual wastewater discharge permit; and

(r) Other conditions as deemed appropriate by the control authority to insure compliance with this ordinance and state and federal pretreatment standards and requirements.

(4) Duration of permits. Permits shall be issued for a specified time period, not to exceed five (5) years. A permit may be issued for a period less than a year or may be stated to expire on a specific date. The permittee must apply for a renewal permit not more than ninety (90) days and no less than seventy-five (75) days prior to the expiration of his or her valid permit. If the user is not notified by the control authority of permit expiration, the permit shall be considered extended for thirty (30) days at a time up to a total of one (1) additional year. The terms and conditions of the permit may be subject to modification and change by the control authority during the life of the permit as limitations or requirements as identified hereinbefore are modified and changed. The user shall be informed of any proposed changes in his or her permit at least thirty (30) days prior to the effective, date of change. Any changes or new conditions in the permit shall include a reasonable time schedule for compliance.

(5) Transfer of a permit. Wastewater discharge permits are issued to a specific user for a specific operation. A wastewater discharge permit shall not be reassigned or transferred or sold to a new owner, new user, different premise, or a new or changed operation. (1969 Code, § 25-39, as replaced by Ord. #2-09, Jan. 2009, repealed by Ord. #4-09, March 2009, and replaced by Ord. #5-09, March 2009)

18-311. Wastewater discharge permit revocation. The superintendent may revoke an individual wastewater discharge permit for good cause, including, but not limited to, the following reasons:

(1) Failure to notify the superintendent of significant changes to the wastewater prior to the changed discharge;

(2) Failure to provide prior notification to the superintendent of changed conditions pursuant to § 18-312(5) of this ordinance;

(3) Misrepresentation or failure to fully disclose all relevant facts in the wastewater discharge permit application;

(4) Falsifying self-monitoring reports and certification statements;

(5) Tampering with monitoring equipment;

(6) Refusing to allow the superintendent timely access to the facility premises and records;

(7) Failure to meet effluent limitations;

(8) Failure to pay fines;

(9) Failure to pay sewer charges;

(10) Failure to meet compliance schedules;

(11) Failure to complete a wastewater surveyor the wastewater discharge permit application;

(12) Failure to provide advance notice of the transfer of business ownership of a permitted facility; or

(13) Violation of any pretreatment standard or requirement, or any terms of the wastewater discharge permit or this ordinance.

Individual wastewater discharge permits shall be voidable upon cessation of operations or transfer of business ownership. All individual wastewater discharge permits issued to a user are void upon the issuance of a new individual wastewater discharge permit to that user. (1969 Code, § 25-40, as replaced by Ord. #2-09, Jan. 2009, repealed by Ord. #4-09, March 2009, and replaced by Ord. #5-09, March 2009)

18-312. Reporting requirements. (1) Baseline monitoring reports.

(a) Within either one hundred eighty (180) days after the effective date of a categorical pretreatment standard, or the final administrative decision on a category determination under Tennessee Rule 1200-4-14-.06(1)(d), whichever is later, existing categorical industrial users currently discharging to or scheduled to discharge to the POTW shall submit to the superintendent a report which contains the information listed in subsection (1)(b) below. At least ninety (90) days prior to commencement of their discharge, new sources, and sources that become categorical industrial users subsequent to the promulgation of an applicable categorical standard, shall submit to the superintendent a report which contains the information listed in subsection (1)(b) below. A new source shall report the method of pretreatment it intends to use to meet applicable categorical standards. A new source also shall give estimates of its anticipated flow and quantity of pollutants to be discharged.

(b) Users described above shall submit the information set forth below.

(i) All information required in §§ 18-310(2)(a)(i)(A), 18-310(2)(a)(ii), 18-310(2)(a)(iii)(A), and 18-310(2)(a)(vi).

(ii) Measurement of pollutants. (A) The user shall provide the information required in §§ 18-310(2)(a)(vii)(A) through 18-310(2)(a)(vii)(D).

(B) The user shall take a minimum of one (1) representative sample to compile that data necessary to comply with the requirements of this paragraph.

(C) Samples should be taken immediately downstream from pretreatment facilities if such exist or immediately downstream from the regulated process if no pretreatment exists. If other wastewaters are mixed with the regulated wastewater prior to pretreatment the user should measure the flows and concentrations necessary to allow use of the combined wastestream formula in Tennessee Rule 1200-4-14-.06(5) to evaluate compliance with the pretreatment standards. Where an alternate concentration or mass limit has been calculated in accordance with Tennessee Rule 1200-4-14-.06(5) this

adjusted limit along with supporting data shall be submitted to the control authority;

(D) Sampling and analysis shall be performed in accordance with §§ 18-313(1) and 18-313(2);

(1) The superintendent may allow the submission of a baseline report which utilizes only historical data so long as the data provides information sufficient to determine the need for industrial pretreatment measures;

(2) The baseline report shall indicate the time, date and place of sampling and methods of analysis, and shall certify that such sampling and analysis is representative of normal work cycles and expected pollutant discharges to the POTW.

(iii) Compliance certification. A statement, reviewed by the user's authorized representative as defined in § 18-304(3) and certified by a qualified professional, indicating whether pretreatment standards are being met on a consistent basis, and, if not, whether additional operation and maintenance (O&M) and/or additional pretreatment is required to meet the pretreatment standards and requirements.

(iv) Compliance schedule. If additional pretreatment and/or O&M will be required to meet the pretreatment standards, the shortest schedule by which the user will provide such additional pretreatment and/or O&M must be provided. The completion date in this schedule shall not be later than the compliance date established for the applicable pretreatment standard. A compliance schedule pursuant to this section must meet the requirements set out in § 18-312(2) of this ordinance.

(v) Signature and report certification. All baseline monitoring reports must be certified in accordance with § 18-313(5)(a) of this ordinance and signed by an authorized representative as defined in § 18-304(3).

(2) Compliance schedule progress reports. The following conditions shall apply to the compliance schedule required by § 18-312(1)(b)(iv) of this ordinance:

(a) The schedule shall contain progress increments in the form of dates for the commencement and completion of major events leading to the construction and operation of additional pretreatment required for the user to meet the applicable pretreatment standards (such events include, but are not limited to, hiring an engineer, completing preliminary and final plans, executing contracts for major components, commencing and completing construction, and beginning and conducting routine operation);

(b) No increment referred to above shall exceed nine (9) months;

(c) The user shall submit a progress report to the superintendent no later than fourteen (14) days following each date in the schedule and the final date of compliance including, as a minimum, whether or not it complied with the increment of progress, the reason for any delay, and, if appropriate, the steps being taken by the user to return to the established schedule; and

(d) In no event shall more than nine (9) months elapse between such progress reports to the superintendent.

(3) Reports on compliance with categorical pretreatment standard deadline. Within ninety (90) days following the date for final compliance with applicable categorical pretreatment standards, or in the case of a new source following commencement of the introduction of wastewater into the POTW, any user subject to such pretreatment standards and requirements shall submit to the superintendent a report containing the information described in §§ 18-310(2)(a)(vi), 18-310(2)(a)(vii), and 18-312(1)(b)(ii) of this ordinance. For users subject to equivalent mass or concentration limits established in accordance with the procedures in § 18-309(1), this report shall contain a reasonable measure of the user's long-term production rate. For all other users subject to categorical pretreatment standards expressed in terms of allowable pollutant discharge per unit of production (or other measure of operation), this report shall include the user's actual production during the appropriate sampling period. All compliance reports must be signed and certified in accordance with § 18-313(5)(a) of this ordinance. All sampling will be done in conformance with § 18-313(2).

(4) Periodic compliance reports. (a) All permitted significant industrial users must, at a frequency determined by the superintendent submit no less than quarterly per year (unless otherwise specified), reports indicating the nature, concentration of pollutants in the discharge which are limited by pretreatment standards and the measured or estimated average and maximum daily flows for the reporting period. In cases where the pretreatment standard requires compliance with a pollution prevention alternative, the user must submit documentation required by the superintendent or the pretreatment standard necessary to determine the compliance status of the user.

(b) The city may authorize an industrial user subject to a categorical pretreatment standard to forego sampling of a pollutant regulated by a categorical pretreatment standard if the industrial user has demonstrated through sampling and other technical factors that the pollutant is neither present nor expected to be present in the discharge, or is present only at background levels from intake water and without any increase in the pollutant due to activities of the industrial user. [see Tennessee Rule 1200-4-14-.12(5)(b)] This authorization is subject to the following conditions:

(i) The waiver may be authorized where a pollutant is determined to be present solely due to sanitary wastewater discharged from the facility provided that the sanitary wastewater is not regulated by an applicable categorical standard and otherwise includes no process wastewater.

(ii) The monitoring waiver is valid only for the duration of the effective period of the individual wastewater discharge permit, but in no case longer than five (5) years. The user must submit a new request for the waiver before the waiver can be granted for each subsequent individual wastewater discharge permit. See § 18-310(2)(a)(viii).

(iii) In making a demonstration that a pollutant is not present, the industrial user must provide data from at least one (1) sampling of the facility's process wastewater prior to any treatment present at the facility that is representative of all wastewater from all processes.

(iv) The request for a monitoring waiver must be signed in accordance with § 18-304(3), and include the certification statement in § 18-313(5)(a). (See Tennessee Rule 1200-4-14-.06(1)(b)2).

(v) Non-detectable sample results may be used only as a demonstration that a pollutant is not present if the EPA approved method from 40 CFR part 136 with the lowest minimum detection level for that pollutant was used in the analysis.

(vi) Any grant of the monitoring waiver by the superintendent must be included as a condition in the user's permit. The reasons supporting the waiver and any information submitted by the user in its request for the waiver must be maintained by the superintendent for three (3) years after expiration of the waiver.

(vii) Upon approval of the monitoring waiver and revision of the user's permit by the superintendent, the industrial user must certify on each report with the statement in § 18-313(5)(c) below, that there has been no increase in the pollutant in its wastestream due to activities of the industrial user.

(viii) In the event that a waived pollutant is found to be present or is expected to be present because of changes that occur in the user's operations, the user must immediately: Comply with the monitoring requirements of § 18-312(4)(a), or other more frequent monitoring requirements imposed by the superintendent, and notify the superintendent.

(ix) This provision does not supersede certification processes and requirements established in categorical

pretreatment standards, except as otherwise specified in the categorical pretreatment standard.

(c) All periodic compliance reports must be signed and certified in accordance with § 18-313(5)(a) of this ordinance.

(d) All wastewater samples must be representative of the user's discharge. Wastewater monitoring and flow measurement facilities shall be properly operated, kept clean, and maintained in good working order at all times. The failure of a user to keep its monitoring facility in good working order shall not be grounds for the user to claim that sample results are unrepresentative of its discharge.

(e) If a user subject to the reporting requirement in this section monitors any regulated pollutant at the appropriate sampling location more frequently than required by the superintendent, using the procedures prescribed in § 18-313(2) of this ordinance, the results of this monitoring shall be included in the report.

(5) Reports of changed conditions. Each user must notify the superintendent of any significant changes to the user's operations or system which might alter the nature, quality, or volume of its wastewater at least thirty (30) days before the change.

(a) The superintendent may require the user to submit such information as may be deemed necessary to evaluate the changed condition, including the submission of a wastewater discharge permit application under § 18-310(2) of this ordinance.

(b) The superintendent may issue an individual wastewater discharge permit under § 18-310 of this ordinance or modify an existing wastewater discharge permit under § 18-310(4) of this ordinance in response to changed conditions or anticipated changed conditions.

(6) Reports of potential problems. (a) In the case of any discharge, including, but not limited to, accidental discharges, discharges of a nonroutine, episodic nature, a noncustomary batch discharge, a slug discharge or slug load, that might cause potential problems for the POTW, the user shall immediately telephone and notify the superintendent of the incident. This notification shall include the location of the discharge, type of waste, concentration and volume, if known, and corrective actions taken by the user.

(b) Within five (5) days following such discharge, the user shall, unless waived by the superintendent, submit a detailed written report describing the cause(s) of the discharge and the measures to be taken by the user to prevent similar future occurrences. Such notification shall not relieve the user of any expense, loss, damage, or other liability which might be incurred as a result of damage to the POTW, natural resources, or any other damage to person or property; nor shall such notification relieve the user of any fines, penalties, or other liability which may be imposed pursuant to this ordinance.

(c) A notice shall be permanently posted on the user's bulletin board or other prominent place advising employees who to call in the event of a discharge described in paragraph (a), above. Employers shall ensure that all employees, who could cause such a discharge to occur, are advised of the emergency notification procedure.

(d) Significant industrial users are required to notify the superintendent immediately of any changes at its facility affecting the potential for a slug discharge. (1969 Code, § 25-41, as replaced by Ord. #2-09, Jan. 2009, repealed by Ord. #4-09, March 2009, and replaced by Ord. #5-09, March 2009)

18-313. Wastewater sampling and analysis. (1) Analytical requirements. All pollutant analyses, including sampling techniques, to be submitted as part of a wastewater discharge permit application or report shall be performed in accordance with the techniques prescribed in 40 CFR part 136 and amendments thereto, unless otherwise specified in an applicable categorical pretreatment standard. If 40 CFR part 136 does not contain sampling or analytical techniques for the pollutant in question, or where the epa determines that the part 136 sampling and analytical techniques are inappropriate for the pollutant in question, sampling and analyses shall be performed by using validated analytical methods or any other applicable sampling and analytical procedures, including procedures suggested by the superintendent or other parties approved by EPA.

(2) Sample collection. Samples collected to satisfy reporting requirements must be based on data obtained through appropriate sampling and analysis performed during the period covered by the report, based on data that is representative of conditions occurring during the reporting period:

(a) Except as indicated in subsection (2)(b) and (2)(c) below, the user must collect wastewater samples using twenty-four (24) hour flow-proportional composite sampling techniques, unless time-proportional composite sampling or grab sampling is authorized by the superintendent. Where time-proportional composite sampling or grab sampling is authorized by the city, the samples must be representative of the discharge. Using protocols (including appropriate preservation) specified in 40 CFR part 136 and appropriate EPA guidance, multiple grab samples collected during a twenty-four (24) hour period may be composited prior to the analysis as follows: for cyanide, total phenols, and sulfides the samples may be composited in the laboratory or in the field; for volatile organics and oil and grease, the samples may be composited in the laboratory. Composite samples for other parameters unaffected by the compositing procedures as documented in approved EPA methodologies may be authorized by the city, as appropriate. In addition, grab samples may be required to show compliance with instantaneous limits.

(b) Samples for oil and grease, temperature, pH, cyanide, total phenols, sulfides, and volatile organic compounds must be obtained using grab collection techniques.

(c) For sampling required in support of baseline monitoring and ninety (90) day compliance reports required in §§ 18-312(1) and 18-312(3) [Tennessee Rule 1200-4-14.12(2) and (4)], a minimum of four (4) grab samples must be used for pH, cyanide, total phenols, oil and grease, sulfide and volatile organic compounds for facilities for which historical sampling data do not exist; for facilities for which historical sampling data are available, the superintendent may authorize a lower minimum. For the reports required by paragraphs § 18-312(4) (Tennessee Rule 1200-4-14-.12(5) and (8)), the industrial user is required to collect the number of grab samples necessary to assess and assure compliance by with applicable pretreatment standards and requirements.

(3) Control manhole. When required by the control authority, the owner of any property serviced by a building sewer carrying industrial wastes shall install a suitable control manhole together with such necessary meters and other appurtenances in the building sewer to facilitate observation, sampling and measurement of the wastes. Such manhole shall be accessibly and safely located, and shall be constructed in accordance with plans approved by the control authority. The manhole shall be installed by the user at his expense, and shall be maintained by him so as to be safe and accessible at all times. The control authority shall have access and use of the control manhole as may be required for their monitoring of the industrial discharge.

(4) Recordkeeping. Users subject to the reporting requirements of this ordinance shall retain, and make available for inspection and copying, all records of information obtained pursuant to any monitoring activities required by this ordinance, any additional records of information obtained pursuant to monitoring activities undertaken by the user independent of such requirements. Records shall include the date, exact place, method, and time of sampling, and the name of the person(s) taking the samples; the dates analyses were performed; who performed the analyses; the analytical techniques or methods used; and the results of such analyses. These records shall remain available for a period of at least three (3) years. This period shall be automatically extended for the duration of any litigation concerning the user or the city, or where the user has been specifically notified of a longer retention period by the superintendent.

(5) Certification statements. (a) Certification of permit applications, user reports and initial monitoring waiver. The following certification statement is required to be signed and submitted by users submitting permit applications in accordance with § 18-310(2)(b); users submitting baseline monitoring reports under § 18-312(1)(b)(v); users submitting reports on compliance with the categorical pretreatment standard deadlines under § 18-312(3); users submitting periodic compliance reports

required by § 18-312(4), and users submitting an initial request to forego sampling of a pollutant on the basis of § 18-312(4)(b)(iv). The following certification statement must be signed by an authorized representative as defined in § 18-304(3):

> I certify under penalty of law that this document and all attachments were prepared under my direction or supervision in accordance with a system designed to assure that qualified personnel properly gather and evaluate the information submitted. Based on my inquiry of the person or persons who manage the system, or those persons directly responsible for gathering the information, the information submitted is, to the best of my knowledge and belief, true, accurate, and complete. I am aware that there are significant penalties for submitting false information, including the possibility of fine and imprisonment for knowing violations.

(b) Annual certification for non-significant categorical industrial users. A facility determined to be a non-significant categorical industrial user by the superintendent pursuant to §§ 18-304(42)(b) and 18-310(2)(b)(iii) must annually submit the following certification statement signed in accordance with the signatory requirements in § 18-304(3). This certification must accompany an alternative report required by the superintendent:

> Based on my inquiry of the person or persons directly responsible for managing compliance with the categorical Pretreatment Standards under 40 CFR _, I certify that, to the best of my knowledge and belief that during the period from _____, _____ to _____, _____ [months, days, year]:

(1) The facility described as _____ [facility name] met the definition of a Non-Significant Categorical Industrial User as described in 18-304(42)(b);

(2) The facility complied with all applicable Pretreatment Standards and requirements during this reporting period; and

(3) The facility never discharged more than 100 gallons of total categorical wastewater on any given day during this reporting period.

This compliance certification is based on the following information.

_____

_____

(c) Certification of pollutants not present. Users that have an approved monitoring waiver based on § 18-312(4)(b) must certify on each report with the following statement that there has been no increase in the pollutant in its wastestream due to activities of the user.

> Based on my inquiry of the person or persons directly responsible for managing compliance with the Pretreatment Standard for 40 CFR _____ [specify applicable National Pretreatment Standard part(s)], I certify that, to the best of my knowledge and belief, there has been no increase in the level of _____ [list pollutant(s)] in the wastewaters due to the activities at the facility since filing of the last periodic report under Section 18-312(4). (1969 Code, § 25-42, as replaced by Ord. #2-09, Jan. 2009, repealed by Ord. #4-09, March 2009, and replaced by Ord. #5-09, March 2009)

18-314. Compliance monitoring. (1) Monitoring programs.

(a) The monitoring program shall require the discharger to conduct a sampling and analysis program of a frequency and type specified by the control authority to demonstrate compliance with prescribed wastewater discharge limits. The discharger may either:

(i) Conduct his or her own sampling and analysis program provided he demonstrates to the control authority that he or she has the necessary qualifications and facilities to perform the work; or

(ii) Engage a private laboratory, approved by the control authority.

(b) In the event that the control authority suspects that a violation of any part of this ordinance or of the user's wastewater discharge permit is occurring, it may take samples for the purpose of monitoring the discharge. Should this monitoring verify that a violation is occurring, the costs of the monitoring and associated laboratory fees will be borne by the discharger. Should no violation be found, the costs will be at the expense of the control authority.

(c) Notice of violation/repeat sampling and reporting. If sampling performed by a user indicates a violation, the user must notify the superintendent within twenty-four (24) hours of becoming aware of the violation. The user shall also repeat the sampling and analysis and submit the results of the repeat analysis to the superintendent within

thirty (30) days after becoming aware of the violation. Resampling by the industrial user is not required if the city performs the sampling at the user's facility at least once a month, or if the city performs sampling at the user's facility between the time when the initial sampling was conducted and the time when the user or the city receives the results of this sampling, or if the city has performed the sampling and analysis in lieu of the industrial user.

(2) Right of entry: inspection and sampling. The superintendent shall have the right to enter the premises of any user to determine whether the user is complying with all requirements of this ordinance and any individual wastewater discharge permit or order issued hereunder. Users shall allow the superintendent ready access to all parts of the premises for the purposes of inspection, sampling, records examination and copying, and the performance of any additional duties.

(a) Where a user has security measures in force which require proper identification and clearance before entry into its premises, the user shall make necessary arrangements with its security guards so that, upon presentation of suitable identification, the superintendent shall be permitted to enter without delay for the purposes of performing specific responsibilities.

(b) The superintendent shall have the right to set up on the user's property, or require installation of, such devices as are necessary to conduct sampling and/or metering of the user's operations.

(c) The superintendent may require the user to install monitoring equipment as necessary. The facility's sampling and monitoring equipment shall be maintained at all times in a safe and proper operating condition by the user at its own expense. All devices used to measure wastewater flow and quality shall be calibrated quarterly to ensure their accuracy.

(d) Any temporary or permanent obstruction to safe and easy access to the facility to be inspected and/or sampled shall be promptly removed by the user at the written or verbal request of the superintendent and shall not be replaced. The costs of clearing such access shall be born by the user.

(e) Unreasonable delays in allowing the superintendent access to the user's premises shall be a violation of this ordinance.

(3) Search warrants. If the superintendent has been refused access to a building, structure, or property, or any part thereof, and is able to demonstrate probable cause to believe that there may be a violation of this ordinance, or that there is a need to inspect and/or sample as part of a routine inspection and sampling program of the city designed to verify compliance with this ordinance or any permit or order issued hereunder, or to protect the overall public health, safety and welfare of the community, the superintendent may seek issuance of

a search warrant from the City Court of Oak Ridge. (as added by Ord. #5-09, March 2009)

18-315. Confidential information. Information and data on a user obtained from reports, surveys, wastewater discharge permit applications, individual wastewater discharge permits, and monitoring programs, and from the superintendent's inspection and sampling activities, shall be available to the public without restriction, unless the user specifically requests, and is able to demonstrate to the satisfaction of the superintendent, that the release of such information would divulge information, processes, or methods of production entitled to protection as trade secrets under applicable state law. Any such request must be asserted at the time of submission of the information or data. When requested and demonstrated by the user furnishing a report that such information should be held confidential, the portions of a report which might disclose trade secrets or secret processes shall not be made available for inspection by the public, but shall be made available immediately upon request to governmental agencies for uses related to the NPDES program or pretreatment program, and in enforcement proceedings involving the person furnishing the report. Wastewater constituents and characteristics and other effluent data, as defined at 40 CFR 2.302 shall not be recognized as confidential information and shall be available to the public without restriction. (as added by Ord. #5-09, March 2009)

18-316. Publication of users in significant noncompliance. The superintendent shall publish annually, in a newspaper of general circulation that provides meaningful public notice within the jurisdictions served by the POTW, a list of the users which, at any time during the previous twelve (12) months, were in significant noncompliance with applicable pretreatment standards and requirements. The term significant noncompliance shall be applicable to all significant industrial users (or any other industrial user that violates paragraphs (3), (4) or (7) of this section) and shall mean:

(1) Chronic violations of wastewater discharge limits, defined here as those in which sixty-six percent (66%) or more of all the measurements taken for the same pollutant parameter taken during a six (6) month period exceed (by any magnitude) a numeric pretreatment standard or requirement, including instantaneous limits as defined in §§ 18-308 and 18-309;

(2) Technical Review Criteria (TRC) violations, defined here as those in which thirty-three percent (33%) or more of wastewater measurements taken for each pollutant parameter during a six (6) month period equals or exceeds the product of the numeric pretreatment standard or requirement including instantaneous limits, as defined by §§ 18-308 and 18-309 multiplied by the applicable criteria (1.4 for BOD, TSS, fats, oils and grease, and 1.2 for all other pollutants except pH);

(3) Any other violation of a pretreatment standard or requirement as defined by §§ 18-308 and 18-309 (daily maximum, long-term average, instantaneous limit, or narrative standard) that the superintendent determines has caused, alone or in combination with other discharges, interference or pass through, including endangering the health of POTW personnel or the general public;

(4) Any discharge of a pollutant that has caused imminent endangerment to the public or to the environment, or has resulted in the superintendent's exercise of its emergency authority to halt or prevent such a discharge;

(5) Failure to meet, within ninety (90) days of the scheduled date, a compliance schedule milestone contained in an individual wastewater discharge permit or enforcement order for starting construction, completing construction, or attaining final compliance;

(6) Failure to provide within forty-five (45) days after the due date, any required reports, including baseline monitoring reports, reports on compliance with categorical pretreatment standard deadlines, periodic self-monitoring reports, and reports on compliance with compliance schedules;

(7) Failure to accurately report noncompliance; or

(8) Any other violation(s), which may include a violation of pollution prevention alternatives, which the superintendent determines will adversely affect the operation or implementation of the local pretreatment program. (as added by Ord. #5-09, March 2009)

18-317. Enforcement procedures. (1) Administrative enforcement remedies. (a) Notification of violation. Whenever the superintendent finds that any user has violated or violating this ordinance, or a wastewater permit or order issued hereunder, the superintendent or his agent may serve upon said user written Notice Of the Violation (NOV). If required in the NOV, a written explanation of the violation and a plan for the satisfactory correction and prevention thereof, to include specific required actions, shall be submitted to the superintendent within the time frame specified, not to exceed thirty (30) days. Submission of this plan in no way relieves the user of liability for any violations occurring before or after receipt of the notice of violation. Nothing in this section shall limit the authority of the superintendent to take any action, including emergency actions or any other enforcement action, without first issuing a notice of violation.

(b) Consent orders. The superintendent is hereby empowered to enter into consent orders, assurances of voluntary compliance, or other similar documents establishing an agreement with a user responsible for the noncompliance. Such orders will include specific action to be taken by the user to correct the noncompliance within a time period also specified

by the order. Consent orders shall have the same force and effect as administrative orders issued pursuant to § 18-317(1)(d) below.

(c) Show cause hearing. The superintendent may order any user who is in violation of or causes or contributes to violation of this ordinance or wastewater permit or order issued hereunder, to show cause why a proposed enforcement action should not be taken. Notice shall be served on the user specifying the time and place for the meeting, the proposed enforcement action and the reasons for such action, and a request that the user show cause why this proposed enforcement action should not be taken. The notice of the meeting shall be served personally or by registered or certified mail (return receipt requested). Ten (10) days prior notice shall be given, if practical. Such notice may be served on any principal executive, general partner, corporate officer, site manager, or other person listed in pretreatment documents submitted by the user as a contact. Whether or not a duly notified user appears as noticed, immediate enforcement action may be pursued.

(d) Compliance order. When the superintendent finds that a user has violated or continues to violate the ordinance or a permit or order issued thereunder, he may issue and order to the industrial user responsible for the discharge directing that, following a specified time period, sewer service shall be discontinued or penalties imposed unless adequate treatment facilities, devices, or other related appurtenances have been installed and are properly operated or other improvements as specified are carried out. Orders may also contain such other requirements as might be reasonably necessary and appropriate to address the noncompliance, including the installation of pretreatment technology, additional self-monitoring, disconnection of unauthorized sources of flow, and management practices. A compliance order may not extend the deadline for compliance established for a pretreatment standard or requirement, nor does a compliance order relieve the user of liability for any violation, including any continuing violation. Issuance of a compliance order shall not be a bar against, or a prerequisite for, taking any other action against the user.

(e) Cease and desist orders. When the superintendent finds that a user has violated or continues to violate this ordinance or any permit or order issued hereunder, the superintendent may issue an order to cease and desist all such violations and direct those persons in noncompliance to:

(i) Comply forthwith;

(ii) Take such appropriate remedial or preventive action as may be needed to properly address a continuing or threatened violation, including halting operations and terminating the discharge. Issuance of a cease and desist order shall not be a bar

against, or a prerequisite for, taking any other action against the user.

(f) Administrative penalties. Notwithstanding any other section of this ordinance, any user who is found to have violated any provision of this ordinance, or any permit or order issued hereunder, may be assessed a penalty in an amount not to exceed ten thousand dollars ($10,000.00) per violation. Each day on which noncompliance shall occur or continue shall be deemed a separate and distinct violation. Such assessments may be added to the user's next scheduled sewer service charge and the superintendent shall have such other collection remedies as he has to collect other service charges. Unpaid charges and penalties shall constitute a lien against the individual user's property. Industrial users desiring to dispute such penalties must file a request for the superintendent to reconsider the penalty within ten (10) days of being notified of the fine. Where the superintendent believes a request has merit, he shall convene a hearing on the matter within fifteen (15) days of receiving the request from the industrial user.

(g) Emergency suspensions. (i) The superintendent may suspend the wastewater treatment service and/or wastewater permit of an industrial user whenever such suspension is necessary in order to stop an actual or threatened discharge presenting or causing an imminent or substantial endangerment to the health or welfare of persons, the POTW, or the environment.

(ii) Any user notified of a suspension of the wastewater treatment service and/or the wastewater permit shall immediately stop or eliminate its contribution. In the event of a user's failure to immediately comply voluntarily with the suspension order, the superintendent may take such steps as deemed necessary, including immediate severance of the sewer connection, to prevent or minimize damage to the POTW, its receiving stream, or endangerment to any individuals. The superintendent may allow the user to recommence its discharge when the endangerment has passed, unless termination proceedings are initiated against the user.

(iii) An industrial user who is responsible, in whole or in part, for imminent endangerment shall submit a detailed written statement describing the causes of the harmful contribution and the measures taken to prevent any future occurrence to the superintendent prior to the date of the hearing described in § 18-317(1)(c).

Nothing in this section shall be interpreted as requiring a hearing prior to any emergency suspension under this section.

(h) Revocation of permit. The superintendent may revoke the permit of any user as set forth in § 18-311.

(i) Appeal of administrative penalties. Upon issuance of any administrative order or penalty, the user shall be notified that he or she shall be entitled to a hearing upon such order or penalty. Request for such hearing must be made seven (7) days of notification of the administrative action. The hearing will be held before the city manager and shall be heard within seven (7) days of the request for hearing. At the hearing, the public works director or the director's representative shall represent the controlling authority. The controlling authority and the customer shall be entitled to present evidence relevant and material to the penalty and to examine and cross examine witnesses. He may be represented by an attorney, if the user so chooses. The city manager shall render a decision within seven (7) days upholding or overturning the administrative order or penalty. Notwithstanding the following, emergency suspensions as described in § 18-317(1)(g) are effective immediately upon issuance, and right to appeal is contingent on compliance by the user.

(2) Judicial remedies. If any person discharges sewage, industrial wastes, or other wastes into the wastewater disposal system contrary to the provisions of this ordinance or any order or permit issued hereunder, the superintendent, through the city attorney, may commence an action for appropriate legal and/or equitable relief in the applicable court.

(a) Injunction relief. Whenever a user has violated or continues to violate the provisions of this ordinance or permit or order issued hereunder, the superintendent, through counsel, may petition the court for the issuance of a preliminary or permanent injunction or both (as may be appropriate) which restrains or compels the activities on the part of the user. The superintendent shall have such remedies to collect these fees as it has to collect other sewer service charges. The superintendent may also seek such other action as is appropriate for legal and/or equitable relief, including a requirement for the user to conduct environmental remediation. A petition for injunctive relief shall not be a bar against, or a prerequisite for, taking any other action against a user.

(b) Civil penalties. (i) Any user who has violated or continues to violate this ordinance or any order or permit issued hereunder, shall be liable to the superintendent for actual damages incurred by the POTW. In addition to damages, the superintendent may recover reasonable attorney's fee, court costs, and other expenses associated with the enforcement activities, including sampling and monitoring expenses.

(ii) The superintendent shall petition the court to impose, assess, and recover such sums. In determining amount of liability, the court shall take into account all relevant circumstances, including, but not limited to, the extent of harm caused by the violation, the magnitude and duration, any economic benefit

gained through the user's violation, corrective actions by the user, the compliance history of the user, and any other factor as justice requires.

(iii) Filing a suit for civil penalties shall not be a bar against, or a prerequisite for, taking any other action against a user.

(3) Criminal actions. (a) Any industrial user who willfully or negligently violates any provision of this ordinance or any orders or permits issued hereunder shall, upon conviction, be guilty of a misdemeanor, punishable by penalty and imprisonment to the full extent allowed by law.

(b) Any industrial user who knowingly makes any false statements, representations or certification in any application, record, report, plan or other document filed or required to be maintained pursuant to this ordinance or waste water permit, or who falsifies, tampers with, or knowingly renders inaccurate any monitoring device or method required under this ordinance shall, upon conviction, be punishable by a penalty and imprisonment to the full extent allowed by law.

(4) Affirmative defenses. (a) Treatment upsets. Any industrial user who experiences an upset in operations that places it in a temporary state of noncompliance, which is not the result of operational error, improperly designed treatment facilities, inadequate treatment facilities, lack of preventive maintenance, or careless or improper operation, shall inform the superintendent thereof immediately upon becoming aware of the upset. Where such information is given orally, a written report thereof shall be filed by the user within five (5) days. The report shall contain:

(i) A description of the upset, its cause(s) and impact on the discharger's compliance status.

(ii) The duration of noncompliance, including exact dates and times of noncompliance, and if the noncompliance is continuing, the time by which compliance is reasonably expected to be restored.

(iii) A user who wishes to establish the affirmative defense of upset shall demonstrate, through properly signed, contemporaneous operating logs, or other relevant evidence that:

(A) An upset occurred and the user can identify the cause(s) of the upset;

(B) The facility was at the time being operated in a prudent and workman-like manner and in compliance with applicable operation and maintenance procedures; and

(C) The user has submitted the following information to the superintendent within twenty-four (24) hours of becoming aware of the upset [if this information is

provided orally, a written submission must be provided within five (5) days]:

(1) A description of the indirect discharge and cause of noncompliance;

(2) The period of noncompliance, including exact dates and times or, if not corrected, the anticipated time the noncompliance is expected to continue; and

(3) Steps being taken and/or planned to reduce, eliminate, and prevent recurrence of the noncompliance.

(iv) In any enforcement proceeding, the user seeking to establish the occurrence of an upset shall have the burden of proof.

(v) Users shall have the opportunity for a judicial determination on any claim of upset only in an enforcement action brought for noncompliance with categorical pretreatment standards.

(vi) Users shall control production of all discharges to the extent necessary to maintain compliance with categorical pretreatment standards upon reduction, loss, or failure of its treatment facility until the facility is restored or an alternative method of treatment is provided. This requirement applies in the situation where, among other things, the primary source of power of the treatment facility is reduced, lost, or fails.

(b) Treatment bypasses. (i) A bypass of the treatment system is prohibited unless all the following conditions are met:

(A) The bypass was unavoidable to prevent loss of life, personal injury, or severe property damage;

(B) There was no feasible alternative to the bypass, including the use of auxiliary treatment or retention of the wastewater; and

(C) The industrial user properly notified the superintendent as described in § 18-317(4)(b)(ii) below.

(ii) Industrial users must provide immediate notice to the superintendent upon discovery of an unanticipated bypass. If necessary, the superintendent may require the industrial user to submit a written report explaining the cause(s), nature, and duration of the bypass, and the steps being taken to prevent its recurrence.

(iii) An industrial user may allow a bypass to occur which does not cause pretreatment standards or requirements to be violated, only if it is for essential maintenance to ensure efficient operation of the treatment system. Industrial users anticipating a bypass must submit notice to the superintendent at least ten (10)

days in advance. The superintendent may only approve the anticipated bypass if the circumstances satisfy those set forth in § 18-317(4)(b)(i) above.

(5) Remedies nonexclusive. The remedies provided for in this ordinance are not exclusive. The superintendent may take any, all or any combination of these actions against a noncompliant user. Enforcement of pretreatment violations will generally be in accordance with the city's enforcement response plan. However, the superintendent may take other action against any user when the circumstances warrant. Further, the superintendent is empowered to take more than one (1) enforcement action against any noncompliant user. (as added by Ord. #5-09, March 2009)

18-318. Industrial waste surcharge. (1) Surcharge based upon strength of wastes. In the event the user discharges industrial wastes to the POTW having an average Biochemical Oxygen Demand (BOD) content in excess of three hundred (300) mg/l, and/or an average Suspended Solids (SS) content in excess of three hundred (300) mg/l, and/or an average ammonia nitrogen content in excess of thirty (30) mg/l, the user shall pay a surcharge based upon the excess strength of their wastes.

(2) Costs of treatment to be reviewed annually. The costs of treatment for each pound of BOD, SS, and ammonia nitrogen removed by the POTW shall be reviewed at the end of each fiscal year and appropriate surcharge rates applied to the sewer billing. These rates shall be in effect until the next annual rate review. (as added by Ord. #5-09, March 2009)

18-319. Validity. (1) Conflict. In case of conflict or inconsistency, the provisions of this ordinance shall supercede and take precedence over any other ordinance or part thereof or any other rules and regulations of the City of Oak Ridge.

(2) Severability. It is hereby declared the intention of city council that sections, paragraphs, sentences, clauses, and words of this ordinance are severable, and if any such section, paragraph, sentence, clause, or word be declared unconstitutional or invalid by valid judgment or decree of any court of competent jurisdiction, such unconstitutionality or invalidity shall not affect any remaining sections, paragraphs, sentences, clauses, or words since the same would have been enacted without the incorporation of the unconstitutional section, paragraph, sentence, clause or word. (as added by Ord. #5-09, March 2009)

You can view the Bookmarks with the Tab to the Left to Navigate through this document (Click BookmarksTab)

Public Works Home Page

TABLE OF CONTENTS

DEFINITIONS AND ABBREVIATIONS **8**
1.01 DEFINITIONS 8
1.02 ABBREVIATIONS 9

SECTION 2.00 ..... **10**

GENERAL PROVISIONS **10**
2.01 GENERAL 10
2.02 MATERIALS AND PRACTICES 10
2.03 CONCRETE 10
2.04 CLEARING AND GRUBBING 11
2.05 EARTHWORK 11
2.06 MAINTENANCE OF TRAFFIC 11
2.07 INSPECTIONS 11
2.08 PERMITS 12
A. City Permits and Approvals 12
(1) Grading Permits 12
(2) Residential Driveway Approval 12
(3) Burning Permit 12
(4) Blasting Permit 12
B. State Permits 12
(1) Sanitary Sewer and Water System Extension 13
(2) Storm Water Permitting 13
(3) Highway Entrance Permit 13
2.09 TREE/SHRUB PLANTING IN THE RIGHT-0F-WAY 13
A. Location 13
B. Maintenance 13

SECTION 3.00 ..... **14**

STREETS **14**
3.01 GENERAL 14
3.02 DESIGN 14
A. Street Classification 14
(1) Arterial Streets 14
(2) Major Collector Streets 14
(3) Minor Collector Streets 15
(4) Local Streets 15
(5) Marginal Access Street 15
(6) Dead-End Streets (Cul-de-Sacs) 15
(7) Alleys 15
(8) Exception to Standards 16
B. Horizontal Street Design 16
(1) General Layout and Conformity to Comprehensive Plan 16
(2) Standards for Curves 16
(3) Tangent Sections 16
(4) Angles of Intersections and Compound Curves 16

(5) Spacing of Intersections ... 17
(6) Superelevation ... 17
C. Vertical Street Design ... 17
(1) Conformity to Existing Grades ... 17
(2) Minimum and Maximum Grades ... 17
(3) Street Intersection Grades ... 17
(4) Vertical Grade Standards ... 18
D. Geometrics ... 18
(1) Radii ... 18
(2) Cul-de-Sac and "Hammer Head" Turn-Arounds ... 18
(3) Driveways (Non-Residential and Residential) ... 18
(4) Curb and Gutter ... 18
(5) Curbs ... 19
(6) Parking Lots ... 19
(7) Sidewalks ... 19
E. Intersection Sight Distance ... 20
F. Utility Placement ... 21
3.03 RESIDENTIAL STREET CONSTRUCTION AND PAVEMENT DESIGN ... 21
A. Typical Street Section ... 21
B. Subgrade Preparation ... 21
C. Binding Fill to Original Ground ... 22
D. Placing, Spreading and Compacting Fill Material ... 22
E. Moisture Content ... 22
F. Placing and Compacting ... 22
G. Completion of General Grading ... 22
H. Subgrade Bearing Strength and Pavement Design-Residential Streets ... 23
I. Alternative Paving of Equivalent Strength ... 24
J. Seasonal Limits ... 24
K. Bridge Design ... 24
L. Pavement Markings ... 24
3.04 MATERIALS ... 24
A. Mineral Aggregate Base ... 24
B. Prime Coat ... 24
C. Bituminous Base Course ... 25
D. Wearing Surface ... 25
3.05 INSPECTION AND TESTS ... 25
A. Streets ... 25
B. Curb and Gutter, Driveways ... 26
(1) Subgrade ... 26
(2) Forms ... 26
3.06 FIRE LANES ... 26
3.07 STREET SIGNS ... 26
3.08 CONNECTION TO EXISTING STREET ... 26

SECTION 4.00 ... 28

SOIL EROSION AND SEDIMENTATION CONTROL ... 28
4.01 SCHEDULING ... 28
4.02 TEMPORARY MEASURES ... 28
A. Silt Fences ... 28
B. Diversion Ditches ... 28
C. Construction Entrances ... 28
D. Sediment or Filter Basins ... 28
E. Seeding and Mulching ... 29
4.03 PERMANENT MEASURES ... 29

A. Ground Cover 29
B. Riprap Dissipation Pads 29
4.04 COMPUTATIONS 29

SECTION 5.00 30

PIPE TRENCHES 30
5.01 EXCAVATION AND PREPARATION OF PIPE TRENCHES 30
5.02 PIPE LAYING AND BACKFILLING 30
5.03 BORING AND JACKING 30

SECTION 6.00 32

WATER DISTRIBUTION 32
6.01 WATER DISTRIBUTION 32
A. General Design Criteria 32
(1) Location and Layout 32
(2) Sizing 32
B. Installation 32
(1) Deflection 32
(2) Locator Wire for PVC Pipe 33
(3) Bedding 33
(4) Service Taps 33
(5) Minimum Cover 33
(6) Horizontal Separation 33
(7) Vertical Separation 33
(8) Stub Outs 34
(9) Manufacturer Markings 34
C. Material 34
(1) PVC Pipe-Residential 34
(2) PVC Pipe Non-Residential 34
(3) Ductile Iron Pipe 35
6.02 FIRE HYDRANTS AND FIRE PROTECTION 35
A. General Design Criteria 35
(1) Required Flow 35
(2) Adequate Fire Protection 35
(3) Fire Hydrant Obstruction 36
(4) Steamer Cap 36
B. Location 36
(1) Residential 36
(2) Non-Residential 36
C. Specifications 37
D. Installation 37
6.03 VALVES AND APPURTENANCES 37
A. Locations 37
(1) Gate Valves 37
(2) Blow-Off Valves 37
(3) Air Release Valves 38
B. Specifications 38
(1) Gate Valves 38
(2) Valve Boxes 38
(3) Blow-Off Assemblies 38
(4) Pipe Fittings 38
(5) Reaction Blocking 39
(6) Tapping Sleeves 39

(7) Air Release Valves ... 39
(8) Valve Installation ... 39
6.04 WATER SERVICE AND TAPS ... 40
A. General ... 40
B. Maintenance ... 40
C. House Service Connections ... 40
D. Materials ... 40
(1) Corporation Stops ... 40
(2) Service Saddles ... 41
(3) Copper Service Tubing ... 41
E. Location ... 41
F. Meters ... 41
6.05 BACKFLOW PREVENTION ... 41
6.06 TESTING AND INSPECTION ... 42
A. General ... 42
B. Disinfection/Chlorination ... 42
C. Bacteriological Sampling ... 42
D. Hydrostatic Testing ... 42
6.07 REPAIR OF WATER LINES ... 43
A. Joint Leaks ... 43
B. Breaks or Punctures ... 43
C. Splits or Blow Outs ... 43
D. Service Line Repairs ... 44
6.08 ACCEPTANCE OF WATER SYSTEM ... 44
A. Residential ... 44
B. Non-Residential ... 44

SECTION 7.00 ... 45

SANITARY SEWER ... 45
7.01 GRAVITY SEWER MAINS ... 45
A. General Design Criteria ... 45
(1) Location ... 45
(2) Creek Crossing ... 45
B. Sizing ... 45
(1) Minimum Size ... 45
(2) Flow Factors ... 46
Land Use ... 46
Flow Factor ... 46
C. Slopes ... 46
(1) Minimum Slope ... 46
(2) Maximum Slope ... 47
D. Installation ... 47
(1) Minimum Cover ... 47
(2) Sewer Depths ... 47
(3) Excavation and Backfilling ... 47
(4) Material Transitions ... 48
(5) Horizontal Separation ... 48
(6) Vertical Separation ... 48
(7) Grading of Easement ... 48
(8) Plugging ... 48
E. Pipe Materials ... 49
(1) Ductile Iron Pipe ... 49
(2) Polyvinyl Chloride (PVC) Pipe ... 49
F. Additional Requirements for Sewer Pipe Installation ... 49

(1) Installation ... 50
(2) Specifications ... 50
(3) Deflection ... 50
(4) Pipe Joints ... 50
(5) Trench Width ... 50
(6) Bedding ... 50
(7) Check Dams ... 51
(8) Shoring ... 51
7.02 SEPTIC SYSTEMS ... 51
7.03 FORCE SEWER MAINS ... 52
A. Sizing ... 52
B. Materials ... 52
(1) Ductile Iron Pipe ... 52
(2) Pipe Joints ... 52
(3) PVC Pipe ... 52
(4) Pipe Fittings ... 52
C. Force Main Installation ... 52
(1) PVC Pipe ... 52
(2) Reaction Blocking ... 53
(3) Force Main Pipe Cover ... 53
(4) Bedding ... 53
(5) Valves ... 53
(6) Receiving Manhole ... 53
(7) Identification ... 53
7.04 MANHOLES ... 54
A. Design ... 54
(1) Spacing ... 54
(2) Size ... 54
B. Installation ... 54
(1) Inverts ... 54
(2) Manhole Drops ... 54
(3) Finished Top Grade ... 54
(4) Manhole Foundations ... 55
(5) Manhole Joints ... 55
(6) Manhole Connectors ... 55
(7) Exterior Surface ... 55
C. Materials ... 55
(1) Precast Concrete Manholes ... 55
(2) Frames and Covers ... 56
(3) Watertight Frames and Covers ... 57
(4) Manhole Steps ... 57
7.05 SERVICE CONNECTIONS ... 57
A. Materials ... 57
(1) PVC Pipe ... 57
(2) Service Saddles ... 57
B. Installation ... 58
(1) Service Taps ... 58
(2) Bedding ... 58
(3) General Requirements ... 58
7.06 TESTING AND INSPECTION ... 58
7.07 REPAIR OF SANITARY SEWER LINES ... 59
7.08 SEWAGE PUMP STATIONS ... 60
A. General Requirements for Sewage Pump Stations ... 60
B. Pumping Rates and Number of Units ... 61
C. Piping Valves ... 61
D. Priming ... 61

E. Controls and Control Panels ... 61
(1) General ... 61
(2) Submersible Pumping Stations ... 62
(3) Above Ground Suction Lift Station ... 62
F. Materials ... 62
G. Wet Well ... 62
H. Electrical ... 63
I. Ventilation ... 63
J. Suction Lift Stations ... 63
(1) Priming ... 63
(2) Capacity ... 64
(3) Air Relief ... 64
K. Submersible Pumping Stations ... 64
(1) Pump Removal ... 64
(2) Controls ... 64
(3) Valves ... 64
(4) Submergence ... 65
L. Warranties and Documentation ... 65
(1) Warranties ... 65
(2) Documentation ... 65
M. Testing and Inspection ... 65
(1) Hydrostatic Testing of Force Main ... 65
(2) Operational Test ... 66
N. Developer's Responsibility ... 67
7.09 ACCEPTANCE OF SANITARY SEWER SYSTEMS ... 67

SECTION 8.00 ... 68

STORM DRAINAGE ... 68
8.01 STORM SEWERS ... 68
A. Design ... 68
(1) Location ... 68
(2) Sizing ... 68
(3) Installation ... 69
(4) Pipe Outlets ... 69
(5) Street Drainage ... 70
(6) Design Data ... 70
8.02 MATERIALS ... 70
A. Pipe Materials ... 70
(1) Reinforced Concrete Pipe ... 70
(2) Corrugated Steel Pipe or Pipe-Arch ... 70
(3) High Density Polyethylene Corrugated Storm Sewer Pipe ... 71
B. Structure Materials ... 71
(1) Clay Brick ... 71
(2) Concrete Masonry Units ... 71
(3) Precast Concrete Manholes ... 71
(4) Manhole Frames and Covers ... 71
(5) Manhole Steps ... 71
(6) Catch Basin Grates ... 72
8.03 PERFORMANCE CRITERIA ... 72
8.04 STORM WATER IMPOUNDMENTS ... 72
A. General ... 72
B. Minimum Design Requirements For City Acceptance ... 72
(1) Executive Summary ... 72
(2) Detailed Drawings ... 73

(3) Sediment Basin 73
(4) Emergency Spillway 73
(5) Spillway Construction 73
(6) Discharge Structure 73
(7) Orifice Plate 73
(8) Basin Aesthetics 74
(9) Basin Swale 74
(10) Concrete Headwalls 74
(11) Soil Type and Compaction 74
(12) Seeding Basin Slopes 74
(13) Basin Slopes 74
(14) Sodding 75
(15) Trash Rack 75
(16) Basin Floor 75
(17) Access Road 75
(18) Landscaping 75
(19) Basin Storage Volume 75

SECTION 9.00 76

"AS BUILT" DRAWING REQUIREMENTS 76
9.01 STREETS 76
9.02 STORM DRAINAGE 76
9.03 WATER SYSTEM 76
9.04 SANITARY SEWER SYSTEM 76

SECTION 10.00 78

STANDARD DETAILS 78
STREETS 78
SOIL EROSION AND SEDIMENT CONTROL 78
PIPE TRENCHES 78
WATER DISTRIBUTION 79
SANITARY SEWERS 79

DEFINITIONS AND ABBREVIATIONS

1.01 DEFINITIONS

CITY MANAGER-The City Manager or his designee (s).

CONTRACTOR-The successful Bidder to whom a contract has been awarded and who has executed the contract documents.

CUL-DE-SAC-A street with only one outlet that terminates in a vehicular turnaround. A turnaround may be circular or T-shaped/hammerhead design.

DEDICATION-The granting by a landowner of specified permanent rights or land for public use, as shown by a written instrument or drawing.

EASEMENT-A lawful right or privilege of use for a specified purpose over land owned by another party.

ENGINEER-The City Engineer of the City of Oak Ridge or other representative duly authorized by the City Engineer.

INSPECTOR-The Engineering Technician or other representative duly authorized by the City Engineer.

INVERT-The lowest point in the internal cross section of a pipe or other culvert.

PLANS-The approved plans, profiles, standard details, supplemental plans, and working drawings, which show the location, dimensions, and details of the work to be done.

RIGHT-OF-WAY-Land owned by a government agency, reserved for streets, utilities and other public uses.

STANDARD REQUIREMENTS-The general term comprising all the directions, provisions, and requirements contained or referred to in this book entitled “Standard Construction Requirements and Details” (SCRD) and in any subsequent revisions or additions to this book.

SUBGRADE-That portion of the roadbed prepared as a foundation for the pavement structure.

VARIANCE-The official provision, by the Planning Commission, of an exemption from compliance with the terms of conditions of these regulations due to a unique hardship related to physical characteristics of the property as provided in Article I, G of the Subdivision Regulations.

1.02 ABBREVIATIONS

AASHTO	American Association of State Highway and Transportation Officials
A.B.S.	Acrylonitrile Butadiene Styrene
ANSI	American National Standards Institute
ASTM	American Society of Testing and Materials
AWWA	American Water Works Association
F	Fahrenheit
ft.	Foot
fps	Feet per second
gpd	Gallons per day
gpm	Gallons per minute
ID	Internal Diameter
lbs.	Pounds
MSL	Mean Sea Level
TDEC	Tennessee Department of Environment and Conservation
TDOT	Tennessee Department of Transportation
NFPA	National Fire Protection Agency
N.E.C.	National Electric Code
OD	Outside Diameter
P.C.	Point of Curvature
P.E.	Professional Engineer
psi	Pounds per square inch
P.T.	Point of Tangency
P.V.C.	Point of Curvature on Vertical Curve
P.V.T.	Point of Tangency on Vertical Curve
Q_{max}	Maximum Discharge
Q_{min}	Minimum Discharge
RH	Relative Humidity
RLS	Registered Land Surveyor
SCRD	Standard Construction Requirements and Details
SCS	Soil Conservation Service
sec.	Second
s.f.	Square feet
V	Volts
VAC	Voltage-Alternating Current

Section 2.00

GENERAL PROVISIONS

2.01 GENERAL

The intent of these construction requirements and details is to describe the level of performance to be met when constructing any infrastructure public improvements within the City.

All construction shall conform to the requirements and dimensions on the approved construction plans, Subdivision Regulations, Erosion Control and Storm Water Management Ordinance, Zoning Ordinance, Code of Ordinances of the City of Oak Ridge, the requirements of the Electric Department, or as stated in these SCRD. All work not explicitly described in these documents shall be constructed in accordance with applicable standards to be found in the latest edition of the TDOT Standard Specifications for Road and Bridge Construction and its applicable amendments, or the TDEC, Division of Water Pollution Control and Division of Water Supply. The design of streets, storm drainage systems, and grading plans shall be signed and sealed by a qualified Engineer, Architect or Landscape Architect licensed in the State of Tennessee. The design of water systems, sanitary sewer systems and flood control projects shall be signed and sealed by a qualified Engineer licensed in the State of Tennessee.

2.02 MATERIALS AND PRACTICES

It is the intent of this document to provide guidance for the designer, developer and constructor of developments and facilities within the City. The City, based on technical merit and justification by the project designer, will consider materials and practices differing from or not covered by this document for approval during the design development stage. The primary interest of the City is to require materials and methods that employ practices meeting or exceeding standards known to the trade. Current specifications and/or the latest revisions shall apply in all cases where materials are referenced by this document.

During the construction phase of a project, equal or better materials not specified may be used provided documentation and samples, necessary for the City to determine their acceptability, are submitted a MINIMUM of FOURTEEN days before they are to be used on the construction site. The City will issue a WRITTEN APPROVAL if the submitted data and samples are acceptable as an equal material.

2.03 CONCRETE

Concrete shall be only plant-mixed or transit-mixed concrete conforming to ASTM C33 for aggregates and to ASTM C94 for ready-mixed concrete. Any concrete placed that has a slump over four inches as per ASTM C143, or has a batched time of more than 90 minutes is unacceptable. Concrete shall not be deposited on frozen subgrade. Concrete shall not be placed when the air temperature is below 40 degrees Fahrenheit, and the predicted low temperature for the next 24 hour period is less than 32 degrees Fahrenheit unless proper freeze protection is provided. All concrete when placed in the forms shall have a temperature of between 50 and 90 degrees Fahrenheit and shall be maintained at a temperature of not less than 50 degrees Fahrenheit for at least 72 hours for normal concrete and 24 hours for

high early strength concrete, or for as much time as is necessary to secure proper rate of curing and designed compressive strength.

Concrete shall be air entrained with five to seven percent air. Retarders and accelerators shall be used only if approved by the City.

2.04 CLEARING AND GRUBBING

The work of clearing and grubbing shall consist of the cutting, removal, and satisfactory disposal of all vegetation and all surface debris.

Clearing and grubbing shall be conducted in a manner to prevent damage to vegetation that is intended to remain and to prevent damage to adjacent property.

Open burning of vegetative materials cleared from land is allowed only under certain conditions. A burning permit must be obtained from the Fire Department. Material larger than six inches in diameter may not be burned unless an approved pit burning operation, including the use of an air curtain destructor, is employed.

2.05 EARTHWORK

Earthwork shall be defined as removal of earth from its natural location, or as the depositing of such material into the proper fill areas as designated on the plans.

Rock excavation shall be defined as removal of all rock or boulders that cannot be economically excavated by proper use of a power shovel or without the use of explosives. A written PERMIT FOR BLASTING must be obtained from the Fire Department in accordance with paragraph 2.08 A.

2.06 MAINTENANCE OF TRAFFIC

Existing public streets or highways shall be kept open to traffic at all times by the contractor unless permission to close these streets, or portions thereof, is granted by the City. Public notice of street closures may be required by the City.

Proper and sufficient traffic control such as barricades, lights, signing and other protective devices shall be required to be installed according to the latest edition of the “Manual on Uniform Traffic Control Devices.” The City may require the submission of a Traffic Control Plan showing traffic control measures during all phases of construction.

2.07 INSPECTIONS

The presence of a City Inspector at the work site shall in no way lessen the contractor or developer’s responsibility for conformity with the approved plans and specifications. City inspectors perform inspections based on availability of time and all elements of construction cannot be reviewed at the time of their construction. Any materials and/or workmanship found not to be in conformance to the approved plans and specifications, at any stage of development, shall be rejected by the City. The contractor/developer shall have no claim for losses suffered due to any necessary removals or repairs resulting from unsatisfactory work or unacceptable materials. Any work, which has been covered without the inspector’s

approval, shall, at the inspector's request, be uncovered and be made available for inspection at the contractor's expense.

2.08 PERMITS

During the course of designing, and prior to construction of a utility or street project, permits from the City, State and Federal government, if applicable, must be obtained. It is the responsibility of the owner/developer to ensure that all fees and applications for permits are submitted.

A. City Permits and Approvals

(1) Grading Permits

A grading permit application may be obtained at the Municipal Building in the Community Development Department. See Section 4.00, Soil Erosion and Sedimentation Control for further details.

(2) Residential Driveway Approval

A curb cut permit including a site plan must be submitted to the City for approval. A permit application may be obtained at the Municipal Building in the Community Development Department. A minimum of five working days should be allowed for approval/disapproval except for arterial street curb cuts. Access to an arterial street must be reviewed by the Traffic Safety Advisory Board and approved by City Council, which will take approximately one month.

(3) Burning Permit

A burning permit shall be obtained a minimum of 24 hours prior to any burning. This permit is obtained from the Fire Department.

(4) Blasting Permit

A written permit for blasting is required any time there is to be transportation, use or storage of explosive materials. This permit is required a minimum of 24 hours before bringing such materials into the City and can be obtained from the Fire Department. Proof of insurance (original policy in the amount of $1,000,000 public liability) and a State of Tennessee Explosive Users Identification card are required.

B. State Permits

After approval by the City, plans for sanitary sewer/water extensions and State highway entrances shall be submitted to the appropriate State agency as required. It is the responsibility of the owner/developer to ensure that all submittals of plans, permit applications and fees are made.

(1) Sanitary Sewer and Water System Extension

For any proposed extension of the public sewer or water system, approval from the TDEC is required. Privately maintained sewer or water systems may require approval by the TDEC as directed by the City. Fee schedules and application forms may be obtained from the TDEC.

(2) Storm Water Permitting

Owners/developers must obtain permission from the TDEC to discharge storm water from any construction or grading activity that disturbs five acres or more of land. Application for permission can be obtained by submitting a Notice of Intent (NOI) on a State NOI form to the TDEC with a copy provided to the City.

Owners/developers may be required to obtain permits from the TDEC and/or US Army Corps of Engineers and/or Tennessee Valley Authority for work in or around "Waters of the State", wetlands or other watercourses.

(3) Highway Entrance Permit

A permit from TDOT is required for any proposed entrance onto a State highway. The State highways include State Routes 58, 61, 62, 95, and 170. Contact TDOT, Region 1 Traffic Division office in Knoxville.

2.09 TREE/SHRUB PLANTING IN THE RIGHT-0F-WAY

When allowed by the City, tree/shrub planting in the right-of-way shall be controlled by the following planting methods:

A. Location

Trees planted in the right-of-way shall be positioned so that when mature, intersection sight distances will not be limited and street safety will not be adversely affected. Trees shall not be located over existing water mains, sewer mains, or electric power lines and shall be at least 15 feet from a fire hydrant.

B. Maintenance

All trees planted in the right-of-way shall be watered and maintained by the owner/developer for a period of one year after planting or until suitable maintenance is provide by the City or by occupants of properties by prior agreement with the City.

SECTION 3.00

STREETS

3.01 GENERAL

All streets within the City of Oak Ridge shall conform to the City Comprehensive Plan both as to the general alignment and right-of-way widths.

3.02 DESIGN

All public streets shall be designed and constructed as specified herein and in accordance with Subdivision Regulations unless the TDOT Standard Specifications are applicable. The TDOT standards shall be used on all existing State roads, extensions of existing State roads, or roads to be maintained by the TDOT.

When a street is planned for future extension or to additional developable property, a temporary turn-around shall be provided and paved and roadway standards shall meet overall requirements of the future full build-out roadway. Curb for such turn-arounds need not be provided unless it is essential to control drainage. Additional right-of-way for such turn-arounds may be provided by a temporary easement, which would lapse when the road is extended.

A. Street Classification

(1) Arterial Streets

Arterial streets shall have a minimum right-of-way width of 90 feet with a minimum lane width of 12 feet. Where on-street parking is desired, an additional eight feet of pavement shall be required for each parking lane. When arterial streets are also State highways, the TDOT may require higher standards.

NOTE: ALL STREETS THAT FOLLOW ARE DESCRIBED IN THE OAK RIDGE ZOINING ORDINANCE AS SECONDARY AND MINOR ROADS.

(2) Major Collector Streets

Collector streets are used for through traffic rather than for providing access to adjoining properties. Access to adjacent property should be planned and controlled so that minimum disturbance is made to the traffic-moving efficiency of the collector street. Major collector streets shall have a minimum right-of-way width of 80 feet and a minimum lane width of 12 feet. Where parking is desired on the right-of-way, an additional eight feet of pavement shall be required for each parking lane.

(3) Minor Collector Streets

Minor collector streets have two open ends once completely developed; each end generally connects with another street. One or more other streets may intersect it between its two open ends. Property fronting on either side of the street may have access to the street. Minor collector streets may carry through traffic within the immediate vicinity. Minor collector streets shall have a minimum right-of-way of 70 feet and a minimum lane width of 12 feet.

(4) Local Streets

Local streets are used primarily for providing access to adjacent properties. Vehicles moving on these streets should have an origin or destination in the immediate vicinity, and all types of through traffic should be minimized through initial design of its connections with other streets. Local streets should have a minimum right-of-way width of 50 feet and a minimum pavement width of 28 feet. Marginal access streets, dead-end streets, or one of several other types may perform the function of local streets. Minimum design standards for streets in low-density developments are provided in Standard Detail 3.17.

(5) Marginal Access Street

Marginal access streets may be required along expressways, arterials and collector streets to provide access to abutting properties and shall be located on the right-of-way. The right-of-way shall be contiguous with right-of-way of the major street and extend a minimum of 10 feet beyond the back of the outside curb of the marginal access streets. The minimum roadway width shall be 24 feet. The Zoning Ordinance further regulates such streets.

(6) Dead-End Streets (Cul-de-Sacs)

Dead-end streets are local streets having only one open end providing no access to another street. No other street intersects between the two ends, and dead-end streets shall have a minimum right-of-way width of 50 feet and a minimum pavement width of 28 feet. They shall be provided at the closed end with a turn-around having an outside street diameter of at least 80 feet and a street right-of-way diameter of at least 100 feet as detailed in Standard Detail 3.01

A “hammer-head” or other non-circular turn-around design may be approved by the Planning Commission as a variance in cases of difficult topography or similar unusual situations, provided that such design can accommodate the turn-around of fire, solid waste collection, and delivery vehicles as determined by the City.

(7) Alleys

Alleys are minor roadways which afford a secondary means of vehicular access to the back or side of properties otherwise abutting a street, and which may be used for public utility purposes. Alleys generally have two open ends, and each end connects

with a street. Alleys shall have sufficient pavement width to adequately serve the anticipated vehicular traffic.

(8) Exception to Standards

When a subdivision has a unified plan which utilizes a more innovative approach to street standards not meeting the above standards in Section A(1-7), the Planning Commission with advice from the City, may approve a different standard which should be equal to or better than the above standards. A traffic engineering impact study may justify sections of reduced roadway and right-of-way width.

B. Horizontal Street Design

(1) General Layout and Conformity to Comprehensive Plan

All streets shall conform to the City Comprehensive Plan when applicable or shall be designed and located in proper relation to existing streets and environment. The alignment of arterial and collector streets should be direct as possible but consistent with topography and preserving developed properties and community values. Residential streets shall be designed to discourage high-speed traffic and minimize excessive cuts, fills and through traffic. Traffic calming principles may be required if the basic design does not discourage traffic speeds, which are inappropriate for the type of street being planned.

(2) Standards for Curves

The design of streets shall conform to the curve controls in Table 3.2 at the end of this section.

(3) Tangent Sections

Minimum tangent lengths between reverse curves on arterial and collector streets shall be computed to provide for superelevation transition lengths in accordance with the TDOT Standards Specifications. Local streets and other lower classified streets not requiring superelevation should provide a minimum tangent length of 75 feet between reverse curves. The minimum tangent length of an approaching intersection should be 50 feet for local and lower classified streets measured from pavement edge. All intersections of streets classified as collector or greater should have a tangent section not less than 100 feet approaching the intersection.

(4) Angles of Intersections and Compound Curves

Compound horizontal curves with the same direction of curvature shall have the radius of the flatter circular arc no more than one and one-half times the radius of the sharper circular arc. Streets shall intersect each other at right angles whenever possible. The minimum desirable intersection angle is 80 degrees unless physically

impossible, but at no time shall a street intersect any other street at less than 60 degrees.

(5) Spacing of Intersections

Intersections with arterial streets should be at least 800 feet apart. There should be a minimum of 200 feet between centerlines of street jogs on collectors and 125 feet between centerlines along other streets.

(6) Superelevation

Superelevation is to be used on all arterials and collectors. Superelevation shall conform to the TDOT and AASHTO standards for superelevation design.

C. Vertical Street Design

(1) Conformity to Existing Grades

Street grades shall be established with respect to existing topography to avoid excessive grading and filling, and the removal of existing trees and vegetation whenever practical.

(2) Minimum and Maximum Grades

The minimum grade allowed on any street shall be one-half of one percent. Maximum grade allowed shall be seven percent for arterial streets, nine percent for collector streets and 12 percent for other streets.

(3) Street Intersection Grades

At every street intersection, one street will be considered the major street and the other will be considered the minor intersecting street. Questions regarding which intersecting street is to be the major/minor street will be resolved by the City. Major street grades will be carried through the intersection with no break in centerline grade or cross slope to the outside edge of through lane. Minor street grades shall connect at the edge of the major street with a smooth connection using crest or sag vertical curves or spline curves if necessary to approximate a vertical curve. Grades approaching an intersection through vertical curves should not exceed five percent for the last 100 feet before the intersection. Minor grade breaks (less than two percent) at the intersecting edge of pavement will be acceptable for local streets. Minor street intersecting road grades should be set to direct storm drainage away from the major street edge and toward the beginning (PC) of curve at the curb return.

(4) Vertical Grade Standards

Maximum grades and vertical curve controls found in Table 3.2 shall be followed at all times.

D. Geometrics

(1) Radii

A minimum radius of 25 feet measured to the face of curb shall be required where local streets intersect.

A minimum radius of 30 feet measured to the face of curb shall be required where a local street intersects with a collector street. It is recommended that the designer consider larger radii or three centered compound curves where needed to provide for turning movements of larger vehicles.

A minimum radius of 40 feet will be required where collectors intersect arterial streets.

(2) Cul-de-Sac and "Hammer Head" Turn-Arounds

Cul-de-sac and "hammerhead" turn-arounds shall be designed as shown in Standard Detail 3.01.

(3) Driveways (Non-Residential and Residential)

Non-residential and residential driveways shall conform to the City Zoning Ordinance, Section 6-603, "Vehicle Access Control" for driveway width, radii, spacing, etc. Where new driveways are constructed at an existing curb and gutter or sidewalk section, the driveway must be constructed in accordance with Standard Details 3.02 and 3.03 for concrete driveway aprons. New residential curb cuts on existing streets with curb and gutter that are maintained by the City shall be installed by the City at the owner's expense unless otherwise approved by the City.

When a residential driveway serves a residence located more than 150 feet from a public roadway, the driveway should be at least 12 feet wide, be minimally passable in all weather conditions, and constructed at a maximum slope of 12 percent to assure proper fire protection.

(4) Curb and Gutter

To eliminate numerous driveway curb breaks and to reduce maintenance costs, the use of valley curb and guttering similar to Standard Detail 3.09, is preferred in residential areas. Street curb and gutter shall be standard 2' 3" or 2' 6" curb and gutter as shown on Standard Details 3.05 and 3.09 unless otherwise approved by the City. Curb and gutter shall be machine formed unless otherwise approved by the

City. Where curb and gutter is used, mineral aggregate base course shall be required to extend beyond the curb and gutter in accordance with Standard Detail 3.04. Standard Detail 3.06 shows a standard method of removing existing concrete curb and gutter. Standard Detail 3.08 shows a minor drain through a curb.

(5) Curbs

In all subdivisions the owner/developer shall provide a cement concrete curb or curb and gutter, the face of which shall not be less than six inches in height unless otherwise approved by the City. Backfill shall normally slope toward the curb. Curbs or curb and gutter shall be machine formed unless otherwise approved by the City. Standard Detail 3.07 shows a typical machine formed curb section.

(6) Parking Lots

All Parking Lots shall conform to the City Zoning Ordinance, Section 6-606, "Required Off-Street Parking."

(7) Sidewalks

Sidewalks shall be constructed in accordance with the latest edition of the TDOT, Standard Specifications for Road and Bridge Construction with the following incorporated changes:

(a) The width of sidewalks shall be in accordance with the City Subdivision Regulations.

(b) Minimum thickness of a sidewalk shall be four inches. At locations where a driveway crosses a sidewalk, a six-inch minimum depth is required. Sidewalks shall have a uniform slope toward the roadway of two percent with a tolerance of one percent unless otherwise indicated on the plans. The unpaved utility strip between the sidewalk and the back of curb shall have a grade of not less than four percent nor greater than six percent sloped toward the roadway. For typical sidewalk sections and details, see Standard Detail 3.10.

(c) Sidewalk construction shall meet the requirements of the Americans with Disabilities Act (ADA) Accessibility Guidelines for Buildings and Facilities found in 36 CFR (Code of Federal Regulations) Chapter XI, Part 1191. Typical handicap ramp details for sidewalk construction are shown on Standard Details 3.11, 3.12 and 3.13.

(d) Materials

- Concrete: Concrete used shall meet the requirements of the TDOT Standard Specifications for Class "A" Structural Concrete.
- Asphalt Walkways: Where permitted, asphalt walkways shall be constructed of the TDOT-approved "E" mix (min. two inch thickness) for asphaltic concrete material with four inch minimum thickness of base material over compacted subgrade.
- Curing Compound: A membrane-curing compound shall be applied on concrete sidewalks as soon as possible after finishing. The compound shall conform to the requirements of Liquid Membrane-Forming Compounds for Curing Concrete, ASTM C309.
- Base Material: All concrete sidewalks shall have four inches of base material consisting of one and one-half inch maximum size mineral aggregate base

from an approved material plant and shall meet requirements of Section 3.04.

(e) Construction Methods

- Excavation: Excavation required for the construction of sidewalks and driveways shall be to the established lines and grades as shown on an approved plan.
- Fine Grading: The contractor shall do all necessary filling, leveling and fine grading required to bring the subgrade to the exact grades specified and compacted to 90 percent standard density in accordance with ASTM D698. Any undercutting excavation may be filled with gravel thoroughly compacted in place to the satisfaction of the City.
- Forms: Forms shall be of a material and section satisfactory to the City, straight, free from warp and of a depth equal to the thickness of the finished work. They shall be securely staked to line and grade maintained in a true position during the depositing of concrete.
- Finishing: Concrete sidewalks shall be finished to a true, even surface. They shall be troweled and then brushed transversely to obtain a smooth uniform brush finish. Joints and sides shall be edged with suitable tools.
- Joints: Expansion joints for sidewalks shall be formed, using expansion joint material of an approved type and shaped to the section. Expansion joints shall be placed in the sidewalk at 40-foot intervals or as otherwise approved by the City. Expansion joints shall also be placed at all intersections, sidewalks with concrete driveways, curbs, formations and other sidewalks and at other locations adjacent to old concrete work. Similar material shall be placed around all obstructions protruding into or through sidewalks or driveways. All expansion joints shall be one-half inch in thickness. Edges of all construction and expansion joints and other edges of all sidewalks shall be finished to approximately a one-fourth inch radius with a suitable finishing tool. Sidewalks shall be grooved with a grooving tool on five-foot spacing in accordance with the TDOT Standard Specifications. When sidewalk is against the curb, expansion joints and tooled grooves shall match those in the curb.

E. Intersection Sight Distance

Intersections shall be designed to meet the minimum horizontal and vertical sight distance standards provided in the latest edition of A Policy on Geometric Design of Highways and Streets published by AASHTO. Minimum sight distances for street intersection designs governed by passenger vehicles are provided in Table. 3.1. Design sight distances for vehicle turning movements shall be listed on all roadway plans submitted to the City for approval and shall meet the minimum requirements as shown below.

Table 3.1

Minimum Sight Distance Along Major Street
For a Passenger Vehicle Stopped on the Cross Road

	Sight Distance (Feet) for Two Lane Major Road	
Design Speed MPH	**Passenger Vehicle Crossing Intersection**	**Passenger Vehicle Turning Left or Right**
25	240	285
30	300	350
40	400	570
50	500	840

Table 3.1 (Cont'd)

	Sight Distance (Feet) for Four Lane (Undivided) Major Road	
Design Speed MPH	**Passenger Vehicle Crossing Intersection**	**Passenger Vehicle Turning Left or Right**
25	290	300
30	340	360
40	450	580
50	560	855

For Single Unit and Semi-trailer sight distance requirements, refer to the latest version of A Policy on Geometric Design of Highways and Streets published by AASHTO when design is governed by the larger design vehicles.

Sight distances shown are based on driver eye height of 3.5 feet and height of object at 4.25 feet. Driver's eye position located 20 feet from edge of through lane on the major road. Sight distance shall be measured along the path on the major street.

Table values are based on level grades and right angle intersections. See AASHTO Policy for sight distance adjustments when necessary.

F. Utility Placement

Utility placement in the right-of-way shall be in accordance with Standard Detail 3.15. Deviations from standard placement requirements will be considered by the City.

3.03 RESIDENTIAL STREET CONSTRUCTION AND PAVEMENT DESIGN

The following standards will be required for the grading, soil stabilizing, preparation of the subgrade, placement of crushed stone base, priming, and application of pavement for all residential streets and right-of-ways.

A. Typical Street Section

All streets shall be graded to such a width that pavements and sidewalks can be constructed generally to the plans indicated on Standard Detail 3.14. A utility strip six feet or more behind the back of curb is required on both sides of the roadway. Sidewalk may occupy some or all of this utility strip. This utility strip shall normally be sloped toward the roadway.

B. Subgrade Preparation

All boulders, tree stumps, organic material, soft clay, spongy material and any other objectionable material shall be removed to a depth of at least two feet below the graded surface in cuts, and the natural ground in fills. This objectionable matter shall be removed from within the right-of-way limits and disposed of in such a manner that it will not become incorporated in the fills, nor in any manner hinder proper operation of the roadway drainage systems. Rock, when encountered, shall be removed to a depth of 12 inches below the subgrade. Where necessary, additional easements shall be required over and above normal right-of-way dedication to maintain banks and drainage where fill or cut extends beyond the

right-of-way. Trees, stumps and all other vegetation in fill areas shall be removed prior to filling.

C. Binding Fill to Original Ground

In order to ensure proper bond and prevent slipping between the original ground and the fill, the surface of the original ground shall be scarified to a reasonable depth. Where fills are made on hillsides or slopes steeper than 4:1 (4 Horizontal:1 Vertical), steps shall be cut into the original ground before filling is begun.

D. Placing, Spreading and Compacting Fill Material

The selected fill material shall be placed in layers which, when compacted, shall not exceed eight inches. Each layer shall be spread evenly and shall be thoroughly blade mixed during spreading to ensure uniformity of material in each layer.

E. Moisture Content

The moisture content of the fill material shall be such that the fill can be compacted to the specified standard Proctor dry density as determined by ASTM D698. If the moisture content of the fill material is below the amount needed to create the necessary density, the proper amount of water shall be added. Similarly, if the moisture content of the fill material is above the needed amount necessary to create the specified density, the fill material shall be aerated by blading or other satisfactory method until the moisture content of the fill material is satisfactory.

F. Placing and Compacting

After each layer has been placed, mixed and evenly spread, it shall be compacted to 95 percent of maximum density as determined by ASTM D698. However, not less than 98 percent maximum density, standard Proctor method, at optimum moisture will be acceptable for a depth of nine inches below the subgrade under all proposed paving areas shown on the plans. Compaction shall be by means of tamping or sheeps foot rollers, multiple-wheel pneumatic-tired rollers or other types of rollers or equivalent which will be able to compact the fill to the desired density. Rolling shall be accomplished while the fill material is at the optimum moisture content range. Rolling of each layer shall be continuous over its entire area and sufficient trips shall be made by the rolling equipment to ensure that the specified density has been obtained.

G. Completion of General Grading

Excavating of cut areas shall continue until these areas conform to the lines, grades, slopes, and typical cross-sections shown on the accepted plans. Placing, spreading, filling, and compacting areas to be filled shall also be continued alternately until these areas conform with the lines, grades, slopes, and typical cross-sections shown on the accepted plans.

Banks of cuts and fills shall be graded to slopes not exceeding 2:1 (2 horizontal:1 vertical). The City may grant an exception in instances where unusual soil or topographic conditions warrant a deviation from these established maximum slopes. When slopes in excess of 2:1

are deemed necessary, the slope must be adequately stabilized to prevent erosion and degradation. Slopes 2:1 or less shall be sodded or planted with soil-fixing grass, shrubs or vines. The viability of such soil-fixing grass, shrubs and/or vines shall be guaranteed by the subdivider for a period of one year from date of planting or final acceptance whichever is latest. For additional cut and fill slope requirements, the City's "Erosion Control and Storm Water Management Ordinance" should be consulted.

H. Subgrade Bearing Strength and Pavement Design-Residential Streets

Soil samples for California Bearing Ratio (CBR) tests shall be collected by an independent testing laboratory to determine the required pavement design. Subgrade conditions shall be based upon corrected soaked CBR values at 0.1-inch penetration as per ASTM D1883. Soil samples used for the CBR tests shall be obtained at intervals not greater than 1,000 feet. Where field conditions warrant, the City may require additional tests at intervals less than 1,000 feet. The CBR of the soil tested will be compared to those in the following Table CBR-1. The Table indicates the three major soil types found in the area and the usual range of CBR values to be expected.

TABLE CBR-1

Soil Type	CBR Range	Relative Subgrade Strength
Cherty-Clay	7.01-or greater	Good
Weathered Shale	4.01-7.00	Fair
Silty-Clay	1-4.00	Poor

Required pavement design Structural Numbers for respective subgrade CBR values are as follows:

TABLE CBR-1

CBR Range	Required Structural Number
7.01 or greater	2.30
4.01-7.00	2.85
1-4.00	3.25

Structural Number values per inch of thickness are provided below for each of the major pavement components:

TABLE CBR-1

Material Type	Structural Number Value per Inch Thickness
Mineral Aggregate Base	0.14
TDOT "BM" Mix Bituminous Base	0.40
TDOT "D" or "E" Mix Asphaltic Surface	0.40

The maximum dept of "D" or "E" Mix shall be two inches, and the minimum depth of "BM" mix shall be two and one-half inches on any project. The following Table CBR-2 lists typical depths of pavement materials suggested to meet the required Structural Numbers for various subgrade CBR ranges.

TABLE CBR-2

CBR Range	Required Structural No.	Base (Inches)	"BM" Mix	"D" or "E" Mix
7.01 or greater	2.30	5	2 ½"	1 ½"
4.01-7.00	2.85	6	3 ½"	1 ½"
1-4.00	3.25	6	4 ½"	1 ½"

I. Alternative Paving of Equivalent Strength

Alternative paving materials and methods, such as concrete, may be used if the developer provides a professional engineer's report, acceptable to the City, to substantiate that the proposed design meets the established bearing strength guidelines for soil types identified. Rigid pavement design shall follow the latest AASHTO method.

J. Seasonal Limits

No fill material shall be placed, spread, or rolled while the ground or fill is frozen or thawing or during unfavorable weather conditions. When heavy rains interrupt the work, fill operations shall not be resumed until the moisture content of the fill material is within a range that will permit compaction to a minimum density of 95 percent (98 percent for top nine inches of subgrade) in accordance with ASTM D698.

K. Bridge Design

All public bridges or private bridges serving more than one property are to be designed to withstand HS-20 highway loading unless otherwise approved by the City and shall be properly signed and sealed by a Tennessee Professional Engineer. Bridge design and construction should be in accordance with the AASHTO, Standard Specifications for Highway Bridges.

L. Pavement Markings

All streets and parking lots shall be marked in accordance with the TDOT Standard Specifications or the latest revisions of the MUTCD. Thermoplastic pavement markings shall be required in areas of existing thermo-plastic markings, on arterial streets, high volume collector streets, and may be required on other streets if deemed necessary by the City for improved safety and durability such as high volume intersections. All specialty markings (i.e. pavement arrows, stop bars, etc.) shall be thermoplastic markings. The City may require painted guide markings prior to placement of thermoplastic permanent markings.

3.04 MATERIALS

A. Mineral Aggregate Base

Mineral Aggregate Base material shall be in conformance with the TDOT Type A, Grade D, Section 903.05, and shall be placed in accordance with the TDOT Section 303. The compacted density shall not be less than 95 percent of maximum density determined in accordance with ASTM D698. The minimum thickness shall be five inches in accordance with Table CBR-2.

B. Prime Coat

If required, the prime coat shall be applied in accordance with the TDOT Section 402 at a rate of approximately 0.35 gallons per square yard of base stone.

C. Bituminous Base Course

All roads must have a layer of bituminous base applied in accordance with the TDOT Section 307, Grade BM. The depth of the layer will be determined by the results of the CBR test performed on a representative subgrade soil sample. Table CBR-2 lists the required pavement layer thickness for typical soil CBR values expected to be found in this region.

D. Wearing Surface

The wearing surface shall consist of a minimum one and one-half inch asphaltic concrete surface course conforming to the TDOT Section 411, Grade D or E and shall be installed in conformance to the TDOT Section 407.

3.05 INSPECTION AND TESTS

No construction shall be conducted until the following applicable items have been obtained: all grading permits, state permits (if applicable), performance bonds if required, and City of Oak Ridge subdivision and plan approval if required.

A. Streets

No base materials shall be placed on a roadway until the subgrade, underlying utilities including storm, water, sewer, and all appurtenances have been inspected and meet or exceed these requirements.

Field density testing should be completed for each layer of fill placed and, as a minimum, will be required for every other layer of fill placed in accordance with Section 3.03. A minimum of one test per 1,000 square yards of surface area placed will be required for each tested layer of fill. Field density testing of the finished subgrade in cuts and fills will be required with a minimum of one test per 1,000 square yards of subgrade surface area. Proof rolling of finished subgrade with a loaded tandem dump truck shall be required.

Field density testing of mineral aggregate base construction will be required at a frequency of one test per 1,000 square yards of surface area for each layer of mineral aggregate base constructed. Proof rolling of finished mineral aggregate base shall be required before placement of bituminous layers.

Field density testing of Bituminous Base and Asphaltic Concrete surface courses will be required as specified in the TDOT Section 407.15 except that frequency of testing shall be based on division of the pavement into 5,000 square yard lots with five density tests per lot.

All field and laboratory testing of earthwork, subgrade, mineral aggregate base, bituminous base and asphaltic concrete surface shall be performed by a city-approved independent testing laboratory and provided at the expense of the developer. Test reports shall be submitted to the City. The City may also require the submittal of an asphalt job mix formula before paving operations begin.

B. Curb and Gutter, Driveways

No concrete shall be placed until the forms have been set and the City has approved subgrades.

(1) Subgrade

Subgrade shall be excavated to the required depth, and shaped to the proper cross-section. Where tree roots are encountered, they shall be removed to a depth of one foot below finished subgrade for the full width of excavation. The subgrade shall be stable and thoroughly compacted.

(2) Forms

Forms shall be set and maintained true to the required lines, grades, and dimensions. Forms shall be constructed with material of such strength and rigidity to prevent any appreciable deflection between supports. Straight forms shall be within a tolerance of one-eight inch in ten feet from a true line horizontally or vertically. Forms shall be thoroughly cleaned of all dirt, mortar and foreign material before being used. All inside form surfaces shall be thoroughly coated with commercial quality form oil.

3.06 FIRE LANES

When required, fire lanes shall be a minimum width of 20 feet and shall be properly marked and signed to designate the access as a “fire lane” as specified by the Fire Chief. The surface of the fire lane shall be paved with an all weather-driving surface suitable for fire fighting equipment.

3.07 STREET SIGNS

Street signs within subdivisions, which will be maintained by the City, shall be installed by the developer and shall be consistent with the Manual for Uniform Traffic Control Devices and Supplements. All signs shall be purchased and installed by the developer before recording of the final plat so as to be in place prior to any issuance of building permits. All signs on the public right-of-way, which are not consistent with the Manual for Uniform Traffic Control Devices, must be approved by the City and privately maintained.

3.08 CONNECTION TO EXISTING STREET

Where new streets connect to existing streets, saw cutting and/or milling of the existing city street shall be performed along the edge of the existing street at a length equal to the width of the new street’s pavement. The width and depth of milling shall be determined by the City.

	Horizontal Curve Controls			Vertical Curve Controls			
	Minimum Design Speed (MPH) (1)	Maximum Superelevation (ft/ft) (2)	Minimum Radii (ft)	Maximum Grade	Length Crest	Absolute Minimum Length Crest	Length Sag
Expressways	Design standards shall conform to Federal and TDOT standards						
Arterial Streets	50	0.06	850	7%	160A	150’	110A
Collector Streets	40	0.04	575	9%	80A	100’	70A
Local Streets	30	Normal Crown	300	12%	30A	80’	40A
Marginal Access Streets	30	Normal Crown	300 (3)	12%	30A	80’	40A
Dead End Streets (Cul-de-Sacs 600 ft or less)	25	Normal Crown	150	12%	20A	50’	30A

A - Algebraic difference in grades

1. Design speed shall be at least five-(5) mph greater than posted speed.

2. The superelevation tables found in A Policy on Design of Urban Highways and Arterial Streets – 1990 or latest edition published by the American Association of State Highway and Transportation Officials will be used for determining the actual rate of superelevation “e” at various radii. Superelevation transitions shall be designed in accordance with TDOT standards.

3. Radii may be reduced at turnouts and intersections.

Table 3.2

SECTION 4.00

SOIL EROSION AND SEDIMENTATION CONTROL

4.01 SCHEDULING

Temporary and permanent erosion control measures shall be provided for all land disturbing work in accordance with the City of Oak Ridge Erosion Control and Storm Water Management Ordinance and a storm water management plan approved by the City. A grading permit shall be obtained from the City prior to beginning site work. Temporary measures shall be installed and inspected by the City for compliance prior to any other land disturbing activity. All temporary measures shall be maintained until the permanent measures have taken effect. All permanent erosion control measures shall be incorporated into the work at the earliest practical time. Temporary and permanent measures shall be coordinated to provide effective and continuous erosion control throughout the construction and post-construction period to minimize siltation of streams, lakes, reservoirs and other impoundments, ground surfaces, and other property.

4.02 TEMPORARY MEASURES

A. Silt Fences

Silt fences shall be installed at the toe of all fill slopes and any other necessary locations as directed by the City. Silt fences shall be erected in accordance with Standard Detail 4.01.

B. Diversion Ditches

To minimize erosion, diversion ditches/berms should be designed for and installed at the top of major cut and fill slopes and at any other necessary locations as directed by the City. Berms and slope drains on fill sections should be considered as needed. Diversion ditches shall be installed in accordance with Standard Detail 4.08.

C. Construction Entrances

Construction entrances shall be installed at all points of access to construction sites. Any access point, which is not a construction entrance, should be barricaded to prevent its use. Construction entrances shall be installed in accordance with Standard Detail 4.07. The City may require additional measures, such as vehicle washing, to assure control of sediments on site.

D. Sediment or Filter Basins

Sediment/filter basins shall be installed at all points where accumulated runoff is released to natural drainage channels required by design or as directed by the City. Sediment/filter basins shall be sized to hold 1,800 cubic feet of sediment for every acre of denuded area

tributary to the structure. Typical sediment/filter basins are shown on Standard Details 4.02 and 4.05.

E. Seeding and Mulching

Seeding and mulching is required immediately upon completion of construction phases. All disturbed areas shall be dressed with topsoil to a depth of three inches. The top two inches shall be pulverized to provide a uniform seedbed. Agricultural lime should be applied at the rate of 100 lbs./1,000 square feet immediately before plowing. Seed should be tall fescue applied at the rate of 2.5 lbs./1,000 square feet.

Fertilizer (5-10-10 or equivalent) should be applied to all disturbed areas at a rate of 20 lbs./1,000 square feet. Mulching should consist of small grain straw applied at a rate of 100 lbs./1,000 square feet.

If active construction ceases in any area for more than 30 days, all disturbed areas shall be seeded, mulched, and tacked unless written approval is granted by the City.

All vegetation shall be maintained for a period of one year from planting or until suitable maintenance is provided by the City or occupants of properties. Planting should be done during favorable weather conditions.

4.03 PERMANENT MEASURES

A. Ground Cover

After construction is complete, all disturbed areas shall receive a permanent ground cover in accordance with the seeding and mulching schedule as identified in the latest edition of the TDOT Standard Specifications unless temporary measures are acceptable by the City.

B. Riprap Dissipation Pads

After construction is complete, all points of storm water release shall be protected by riprap dissipation pads or other measures designed to reduce discharge velocities to non-erosive levels. The dissipation pads shall be designed and constructed with either an engineering fabric or washed stone barrier between the dissipation pad and the natural ground. Calculations shall be furnished to indicate the sufficiency of the dissipation pads specified. Riprap pad design shall be in accordance with SCS or other commonly accepted methods.

4.04 COMPUTATIONS

All computations and assumptions used to formulate a storm water management plan shall be submitted to the City for review. Refer to the TDEC requirements for storm water management plans and the City Erosion Control and Storm Water Management Ordinance for design criteria.

SECTION 5.00

PIPE TRENCHES

5.01 EXCAVATION AND PREPARATION OF PIPE TRENCHES

Trenches for water distribution lines, sanitary sewer lines, force mains, and storm sewer lines shall be excavated to the required depth to permit installation of the pipe along the lines and grades shown on the construction drawings. The minimum trench width at the top of the pipe shall be at least 16 inches greater than the outside diameter of the pipe to allow for proper compaction. Where excavation is in rock, the rock shall be removed to a depth of at least six inches below finished pipe grade and shall be backfilled with materials in accordance with these specifications. Where wet soil conditions are encountered, trenches shall be stabilized with #2 stone and with a base layer of #57 stone.

5.02 PIPE LAYING AND BACKFILLING

All pipes shall be laid in accordance with the manufacturer's recommendations. The subgrade at the bottom of the trench shall be shaped to secure uniform support throughout the length of the pipe. A space shall be excavated under the bell of each pipe to provide space to relieve bearing pressure on the bell and to provide room to adequately make the joint. Open ends of water and sanitary sewer pipe shall be plugged with a standard plug or cap at all times when pipe laying is not in progress. Trench water shall not enter the pipe. Backfill material shall be free from construction material, debris, frozen material, organic material, or unstable material. Backfill material shall be free from stones greater than four inches in diameter.

Trench backfill under new and existing roadways and extending to three feet beyond the back of curb or edge of shoulder, measured perpendicular from the centerline shall be in accordance with Standard Details 5.01 and 7.12.

All pavement cuts must have approval from the City. All trenches shall be properly backfilled at the end of each working day unless otherwise approved by the City. All pavement cuts shall be repaired within a maximum of three days from the date the cut is made. If conditions do not permit a permanent repair within the given time limit, permission to make a temporary repair must be obtained from the City.

5.03 BORING AND JACKING

In locations where open pipe trenches are not allowed as determined by the City, dry bore and jack operations may be allowed. Smooth wall steel pipe may be jacked through dry bores slightly larger than the pipe bored progressively ahead of the leading edge of the advancing pipe. The spoil material shall be mucked by the auger back through the pipe during the boring operation. As dry boring progresses, each new section of the encasement pipe shall be butt-welded to the section previously jacked into place.

In the event that an obstruction is encountered during the boring and jacking operation, the auger is to be withdrawn and the excess pipe is to be cut off, capped, and filled with 1:3 cement grout at a sufficient pressure to fill all voids before moving to another boring site.

Size and wall thickness of smooth wall encasement pipe shall be as follows:

Pipe Size (O.D.inc.)	Wall Thickness (in.)
12 ¾	0.188
16	0.250
18	0.250
20	0.250
24	0.250
30	0.312
36	0.375

Casing pipe shall be installed with a minimum cover of four feet under pavement surface.

All carrier pipe shall be mechanical joint ductile iron pipe resting on treated timber skids as shown on Standard Detail 5.02 so as to prevent damage to the pipe joints. Pipe joints shall not contact the interior of the casing pipe. No blocks or spacers shall be wedged between the pipe and the top of the casing. Casing pipe shall have the following minimum sizes:

Carrier Pipe Size (in.)	Wall Thickness (in.)
4	12 ¾
6	12 ¾
8	18
10	20
12	24
14	26
16	28

SECTION 6.00

WATER DISTRIBUTION

6.01 WATER DISTRIBUTION

A. General Design Criteria

Water distribution systems shall be constructed in accordance with the latest edition of the TDEC "Public Water Systems Design Criteria." If discrepancies are found between the TDEC and City requirements, the more stringent shall apply.

(1) Location and Layout

All public water mains shall be located within dedicated right-of-ways and/or dedicated easements with a minimum width of 10 feet, centered about the pipe. An easement of 15 feet shall be required where the depth is greater than five feet but less than eight feet. An easement of 20 feet shall be required where depths are greater than eight feet. Pipe systems shall be arranged in loops unless otherwise permitted by the City. No part of any structure, including foundations and overhangs are permitted in an easement.

Where deemed appropriate by the City, all systems in non-residential areas will have proper metering and backflow prevention devices installed as close to the existing city-owned main as possible. Final determination of their location shall be at the sole discretion of the City.

(2) Sizing

In residential areas, in order to obtain maximum available fire flow, mains shall be a minimum of six inches in diameter. Four-inch mains are permitted on residential cul-de-sacs less than 400 feet in length provided no fire hydrants are required on the cul-de-sac and adequate pressure is available. Use of two-inch mains shall be considered for short cul-de-sacs and permanent dead ends where future growth is not feasible and where justified by hydraulic analysis.

In non-residential districts, six-inch water mains are acceptable where fire flows of 1,000 gpm at 20-psi residual pressure can be achieved.

B. Installation

(1) Deflection

Maximum deflection for PVC pipe shall be five percent. Cast iron or ductile iron fittings are required if deflection will be more than five percent.

(2) Locator Wire for PVC Pipe

When PVC pipe is installed, an insulated solid copper locator wire, minimum size #12, shall be installed with the pipe. The wire shall be installed under the pipe prior to pipe placement. The locator wire shall be pulled up to the ground surface in all valve boxes and splices should be made in valve boxes. All splices should be made with a corrosive resistant connection as approved by the City. The locator wire shall follow the entire length of the main.

(3) Bedding

No water mains shall be laid on rock until the rock has been covered by a minimum of six inches of fine graded stone. PVC water mains shall be bedded in #57 stone with three inches minimum under the main and six inches minimum over the main in accordance with Standard Detail 6.01. Ductile iron pipe may optionally be bedded with Class I, II or III materials in accordance with ASTM D2321 and Section 7.01F(6).

(4) Service Taps

PVC pipe will require brass or bronze saddles for all service taps. Direct taps are permissible on ductile iron pipe.

(5) Minimum Cover

All water mains shall be installed with a minimum cover of 30 inches measured from the top of the pipe to the finish grade.

(6) Horizontal Separation

Water mains shall be at least 10 feet measured horizontally edge-to-edge from existing or proposed sanitary sewer, storm sewer or sewer manhole. If the elevation of the bottom of the water main is at least 18 inches above the top of the sewer, a horizontal separation of at least three feet is allowed.

(7) Vertical Separation

Under normal conditions, water mains crossing sanitary sewers or storm sewers shall be laid to provide a vertical separation of at least 18 inches between the bottom of the water main and the top of the sewer.

Where a water main crosses over an existing sanitary or storm sewer and the vertical separation is less than 18 inches, the water main shall be encased in concrete or in one length of steel encasement ductile iron pipe centered at the point of crossing.

Where a water main crosses over a new sanitary or storm sewer and the vertical separation is less than 18 inches, the sewer line shall be constructed of water pipe

for a distance of at least nine feet on either side of the point of crossing. The water line pipe shall have one pipe length centered at the point of crossing.

Where water mains cross under sewers, a minimum vertical separation of at least 18 inches shall be provided between the bottom of the sewer and the top of the water main. Both the water main and the sewer line shall be constructed of water line pipe with a length of water line pipe centered at the point of crossing. Adequate structural support shall be provided to prevent excessive deflection of joints and settling on and breaking the water mains.

(8) Stub Outs

When mains are to be installed to a dead end or stubbed out for future extension, at least one 18-foot joint of pipe shall be installed with a thrust collar. A main line valve and blow-off assembly shall be installed on a water line proposed for future extensions per Standard Detail 6.02. Permanent dead end mains shall be installed with a blow-off valve in accordance with Standard Detail 6.04.

(9) Manufacturer Markings

All pipes shall be installed so that the manufacturer markings are positioned on the topside of the pipe.

C. Material

All pipe and appurtenances shall comply with the latest applicable AWWA and ASTM standards.

(1) PVC Pipe-Residential

Pipe shall be SDR 21, Class 200 pressure rated pipe as long as the working pressure does not exceed 135 psi. Joints shall provide for expansion and contraction with the use of rubber rings and tapered ends as an integral part of each full joint. Joints for Class 200 pipe shall be manufactured per ASTM D3139. Gasket materials shall meet the requirements of ASTM F477. Pipe shall be clearly marked with manufacturer's name, nominal diameter, SDR, ASTM D2241, pressure rating, and NSF approval seal. No solvent cement couplings will be permitted.

(2) PVC Pipe Non-Residential

Pipe shall meet the requirements of AWWA C900. Pipe shall be Class 200, DR 14, integral bell with strength equal to the pipe wall, cast iron OD, 18-foot length, with joints using a solid elastomeric ring. Pipe, appurtenances, and fittings shall conform to AWWA C900. All pipes must be clearly marked with the manufacturer's name, nominal diameter, DR, pressure class, AWWA C900, and NSF approval seal.

(3) Ductile Iron Pipe

Pipe shall be Pressure Class 350 up to and including pipes 12 inches in diameter in accordance with ANSI/AWWA C150/A21.50. Pipes greater than 12 inches in diameter shall be designed for Pressure Class in accordance with ANSI/AWWA C150/A21.50. Pipe shall be manufactured as per AWWA C151 in 18-foot lengths.

Joints shall be of the push-on type as per AWWA C111. Pipe lining shall be cement mortar with a seal coat of bituminous material in accordance with AWWA C104.

Mechanical joint pipe may be required at the discretion of the City at locations such as stream crossings, fill sections, etc.

6.02 FIRE HYDRANTS AND FIRE PROTECTION

A. General Design Criteria

(1) Required Flow

Based on available water flow data provided by the City, water mains shall provide required fire flow for an area and shall be large enough in all cases to deliver the flow required for fire suppression purposes. The amount of water required and therefore delivered by each fire hydrant shall be no less than 500 gpm with 20 pounds per square inch residual pressure in residential areas and no less than 1,000 gpm with 20 pounds per square inch residual pressure in non-residential areas during times of peak system demand. The requirements of the Insurance Services Office Commercial Risk Services and related agencies with regulator authority shall be investigated and complied with, if more stringent than the minimum flows set forth above. The City may require a higher flow where building conditions warrant such action.

(2) Adequate Fire Protection

In any one or more of the conditions listed below, the developer or builder shall provide a means for adequate fire protection including but not limited to the installation of a domestic sprinkler system complying with applicable codes, the installation of an additional fire hydrant capable of supplying adequate flow, or the installation of a booster pump to increase flow to an acceptable level at the structure.

a. Any part of the building is more than five hundred (500) feet from a hydrant measured along an accessible roadway: or
b. The nearest hydrant provides a water supply of less than five hundred (500) gpm in residential areas and 1,000 gpm in non-residential areas at twenty pounds per square inch residual pressure at periods of peak demand.
c. The elevation difference between the highest floor of the referenced structure and the nearest hydrant prevents adequate water flow and pressure for fire protection at that structure.

(3) Fire Hydrant Obstruction

No objects or obstructions such as fences, trees, bushes, shrubbery, plants, etc., shall be located within five feet of any fire hydrant.

(4) Steamer Cap

Steamer cap shall face the paved road (or parking area) so that it will be accessible to a fire department pumper. The center of the steamer cap will be no less than 18 inches and a maximum of 24 inches from finished grade level at the hydrant as determined by the final grade of the completed project. For standard fire hydrant installation, see Standard Detail 6.03.

B. Location

(1) Residential

The maximum distance between fire hydrants, measured along street centerlines shall be 450 feet.

(2) Non-Residential

In buildings required to have a sprinkler fire protection system installed, one accessible hydrant (either public or private) will be located not more than 100 feet from the fire siamese connection. For buildings with a sprinkler system, there will be one accessible hydrant provided on each of two opposing sides of the building. The hydrant required for the sprinkler system may be counted as one of these hydrants. There shall be additional hydrants provided to meet the requirement of a maximum 550-foot distance between a hydrant and any part of the building first floor. The hydrant (s) will be situated not less than two feet and not more than10 feet from the curb of an access road, parking area, or public road. If situated in a parking area, there will be an area of NO PARKING marked around the hydrant for an area of 15 feet on all sides.

Example: A non-residential building of a 20,000 square feet area, sprinkled, would need a minimum of two hydrants (one within 100 feet of the sprinkler siamese connection and one on the opposing side of the building).

Paved access of a minimum 20 feet in width shall be required within 100 feet of two sides of each non-residential building. Paved access shall be required to be within ten feet of each required fire hydrant.

Emergency access to each side of all buildings three or more stories in height shall be provided by means of an unobstructed area of at least 12 feet in width which would support the weight of a fire ladder truck. This area is not required to be a permanent roadway, but must be accessible during an emergency. Prior to completion of grading and landscaping design, the Fire Department should be consulted.

C. Specifications

Hydrants shall conform to AWWA C502 with a minimum valve opening of five and one-fourth inches. Hydrants shall be furnished with a four and one-half inch steamer and two double two and one-half inch hose connections with caps and chains, National Standard Threads, one and one-half inch bronze pentagon operation nut, open left, painted safety yellow, bronze to bronze seating, a minimum 42-inch bury depth with a break away ground line flange, break away rod coupling, and mechanical joint inlet. The hydrant bonnet will be designed with a sealed oil or grease reservoir with O-ring seals and a Teflon thrust bearing. Hydrants, meeting these requirements, manufactured by Kennedy, Mueller, U.S. Pipe or M&H are acceptable.

D. Installation

Hydrants shall be set plumb, properly located, with the steamer connection facing the closest curb with the center of the connection a minimum of 18 inches above final grade. The back of the hydrant opposite the pipe connection shall be firmly blocked against the vertical face of the trench with a minimum one-third cubic yard of concrete with care taken to prevent the hydrant drain holes from being covered or filled with concrete. Double bridle rods and collars shall be connected from the tee to the valve and from the valve to the hydrant. Rods shall not be less than five-eights of an inch diameter stock of wrought iron or stainless steel. A minimum of eight cubic feet of stone shall be placed around the drains. The backfill around the hydrants shall be thoroughly compacted. Hydrant installation shall be in accordance with Standard Detail 6.03.

6.03 VALVES AND APPURTENANCES

A. Locations

(1) Gate Valves

Gate valves shall be installed on all branches from feeder mains and hydrants according to the following schedule: three valves at crossings, two valves at tees, and one valve on each hydrant branch. When a loop section of water line is connected back into the feeder main within a distance of 200 feet or less, only one valve will be required in the feeder main.

Where no water line intersections exist, a main line valve shall be installed at every 100 feet per one-inch diameter main up to a maximum distance of 1,000 feet between valves. The distance between valves for water lines 10 inches or larger in diameter shall not be greater than 1,000 feet.

(2) Blow-Off Valves

Blow-off valves as detailed in Standard Details 6.02 and 6.04 shall be installed at major low points and at the end of all dead-end water lines as directed by the City

with the exception of water lines six inches diameter and greater which have a fire hydrant located within 20 feet of the end of the line. Fire hydrants may optionally be used at low points as directed by the City.

(3) Air Release Valves

Air release valves as detailed in Standard Detail 6.05 shall be installed at all major high points of water lines six inches in diameter or larger and at other locations as directed by the City. Fire hydrants may be used in lieu of the above requirements.

B. Specifications

(1) Gate Valves

Gate valves shall be approved by the City and shall meet all requirements of AWWA C500 for a working pressure of 200 psi for valves up to 12 inches and 150 psi for valves greater than 12 inches. All gate valves shall be mechanical joint with ductile iron body, Teflon coated interior, resilient seated gate valve with a non-rising stem and open left with a double O-ring seal. Resilient seated gate valves shall meet the requirements of AWWA C509.

Gate valves up to and including 12 inches, shall be installed in a vertical position. Gate valves 16 inches and larger shall be installed only under the direction of the City and shall be horizontally installed and equipped with bevel gears, grease case, rollers, tracks scrapers, and a bypass located on the side of the body. Fully revolving disc valves shall not require rollers.

Valves 12 inches and larger with roller and scraper operators shall be installed in a valve pit. All valves 24 inches and greater shall be installed in a valve pit.

(2) Valve Boxes

Valve boxes as detailed in Standard Detail 6.06 shall be cast iron of the screw or telescopic type as approved by the City, with a five-inch opening and “water” cast on the cover.

(3) Blow-Off Assemblies

Blow-off assemblies shall be constructed as shown on Standard Details 6.02 and 6.04. The valves shall be gate types with a non-rising stem, two-inch operating nut, O-ring seals and mechanical joint ends.

(4) Pipe Fittings

Pipe fittings shall be ductile iron designed and manufactured as per AWWA C110. All sizes of fittings shall be designed for an internal pressure as specified in AWWA C110. Compact ductile iron mechanical joint fittings in accordance with AWWA C153

are also acceptable. Fittings shall be lined with cement mortar and a seal coat of bituminous material or Teflon, all in accordance with AWWA C014.

(5) Reaction Blocking

All fittings or components subject to hydrostatic thrust shall be securely anchored by the use of concrete thrust blocks poured in place. The reaction volumes are shown in Standard Detail 6.07. Concrete for reaction blocking shall be placed to minimize interference with future removal of fittings. Material for reaction blocking shall be 3,000 psi concrete.

(6) Tapping Sleeves

Tapping sleeves shall be two piece split cast iron or ductile sleeves or stainless steel full circle clamp style. The sleeve shall be mechanical joint to the main line and flanged to the tapping valve. The City shall approve tapping sleeves and valves.

The maximum size saddle outlet for each size of pipe to be tapped shall be as follows:

Pipe Size To be Tapped	Maximum Size Saddle Outlet
6”	4”
8”	6”
10”	8”
12”	8”
16”	8”
18”	8”
20”	10”
24” and larger	12”

Use of stainless steel sleeve may allow full diameter taps.

(7) Air Release Valves

Air release valves shall have a one-inch nominal diameter for eight-inch mains and smaller, and a two-inch National Pipe Thread inlet for mains 10 inches in diameter and 150 percent of maximum working pressure in accordance with AWWA C512. All air release valves shall have a separate shut off valve of approved type. An air relief valve is shown in Standard Detail 6.05.

(8) Valve Installation

Valves shall be properly located, operable and at the correct elevation. The valve box shall be centered over the wrench nut and seated on compacted backfill without touching the valve assembly. All valve boxes outside of paved areas shall be encased in a trowel finished one and one-half feet by one and one-half feet by six-inch thick pad of 3,000 psi concrete with the concrete and cover flush with the top of the ground. Precast concrete valve box encasements may be used for valve box

encasement outside of paved areas. Concrete pad and valve box installation is shown on Standard Detail 6.06.

6.04 WATER SERVICE AND TAPS

A. General

All connections to existing city water mains shall be made by Public Works personnel at the expense of the developer. Service taps on new residential water lines being installed shall be made by the contractor in accordance with City of Oak Ridge standards. Under certain conditions, the City may allow wet taps to be installed by an approved contractor.

B. Maintenance

After formal Council acceptance of subdivisions, the City will maintain all water service laterals up to the meter. Prior to City acceptance all repairs are the responsibility of the contractor/developer. After acceptance and in the case where a lateral between the main and meter is damaged by construction, the City will make repairs on an actual cost basis with the financial responsibility being borne by the party that caused the damage. Repair of damage to the service between the meter and the structure being served will be the responsibility of the contractor and must be performed by a properly licensed plumber and shall be inspected by the City plumbing inspector.

C. House Service Connections

All services shall be a minimum of three-fourths of an inch. One-inch services are required for double service lines. The service connection consists of the pipe and appurtenances between the main and any property line. All services shall be a minimum of 24 inches deep. Any services under roadways must be backfilled with # 57 stone up to the subgrade surface.

D. Materials

(1) Corporation Stops

Corporation stops shall be brass, complete with a compression (packed joint) type outlet coupling and AWWA Standard threads as per AWWA C800. Taps shall be located at 10:00 or 2:00 on the circumference of the pipe. Service taps shall be staggered at least 12 inches apart and not in a straight line.

The maximum size of direct taps without a fitting, tapping sleeve or saddle for ductile iron water mains of pressure Class 350 shall be as follows:

4” main	¾” tap
6” main	1 - 1/2” tap
8” main	1 – 1/2” tap
12” main	2” tap

No burned taps will be allowed and each corporation stop shall have its inlet threads wrapped with Teflon tape and coated with pipe joint compound.

(2) Service Saddles

Service saddles shall be used on all water mains that are not ductile iron pipe. Saddles shall be bronze body (85-5-5 waterworks brass) and double strap for taps over one-inch with silicon bronze nuts and factory installed grade 60 rubber gaskets.

(3) Copper Service Tubing

Copper service tubing shall be type K soft copper tubing as per ASTM B88. No unions shall be used in the installation of the service connection of 100 feet or less. Service lines more than 100 feet shall use a three-piece compression coupling. Only one compression coupling shall be used for each 100 feet or fraction thereof. Fittings will not be permitted under any roadway surface.

E. Location

Residential service lines shall extend from the main to the approved lot corner in a straight line and end no closer than two feet from the property corner or right-of-way line. Non-residential service locations will be considered on a case-by-case basis. All service lines shall be clearly marked with three-eights inch rebar per Standard Detail 6.08.

F. Meters

All meters and meter boxes shall be installed by Public Works personnel or be installed by a contractor as approved or required by the City. Meters shall not be installed in sidewalk, driveway or other paved surfaces without prior City approval.

6.05 BACKFLOW PREVENTION

When a fire protection system is proposed and no anti-freeze or other chemicals are to be used, a double detector check valve assembly including two check valves, two gate valves, and four test cocks and bypass detector meter shall be installed on the sprinkler fire protection line. If any chemicals are proposed to be added to a sprinkler fire protection system, a reduced pressure principal backflow preventer approved by the City shall be installed. No backflow preventer device shall be installed below ground. All irrigation systems shall be provided with an approved reduced pressure backflow preventer installed above ground or within an interior structure accessible by the City. All backflow preventers and their installations must have prior approval by the City before installation.

A post indicator valve shall be provided at least six feet from the building or on the wall of the building when backflow prevention devices are contained within a building. Clear and unobstructed access shall be provided to the double detector check valve assembly.

All new commercial/industrial facilities shall install a reduced pressure zone backflow preventer on any incoming potable water lines. The device shall be installed on the supply

line at a location that is in advance of any internal distribution branches. The installation and location shall have pre-approval of the City Environmental Compliance Officer.

6.06 TESTING AND INSPECTION

A. General

All materials used must have a preliminary inspection by the City Inspector before they shall be allowed. Materials rejected by the Inspector shall be immediately removed from the job site.

The contractor shall furnish all materials, labor and equipment to perform all testing to the satisfaction of the City. Water mains and appurtenances must be tested and fully functional prior to the approval of any subdivision Final Plat.

B. Disinfection/Chlorination

Calcium Hypochlorite shall be used for disinfecting water lines in accordance with AWWA Standard for disinfecting water mains (AWWA C651). All additions or replacements to the water system shall be chlorinated before being placed in service. Such chlorination must take place under the supervision of the City.

C. Bacteriological Sampling

Free residual chlorine after 24 hours shall be at least 25 ppm or the City will require that the lines be rechlorinated.

Flushing of lines may proceed after 24 hours, provided the free residual chlorine analysis is satisfactory. No flushing shall take place unless the City Public Works Engineering Technician is present. The Technician shall collect samples for bacteriological analysis 24 hours after flushing is completed. The contractor shall furnish such help as may be required to secure these samples.

If test results are unsatisfactory, the contractor shall immediately rechlorinate lines and proceed with such measures as are necessary to secure sterile lines.

The new water system shall be valved off from the existing system until a satisfactory bacteriological sample has been obtained and the Inspector has authorized the use of the new water system.

D. Hydrostatic Testing

Hydrostatic testing shall not be performed until the line segment has been disinfected and passed bacteriological testing. No gate valve in the existing City water system shall be operated without authorization from the City Public Works Department. A section of line, which is to be hydrostatically tested, shall be slowly filled with water at a rate, which will allow complete evacuation of air from the line. No gate valves shall be operated without a City

representative present. Pressure and leakage tests shall be performed in accordance with AWWA C600 procedures.

The line shall be tested to a pressure of 150 psi or 1.5 times the working pressure; whichever is greater, as measured at the highest elevation of the line for duration of two hours. The pressure rating of the pipe, fittings, valves, and thrust restraints shall be at least 1.5 times the working pressure of the pipe. Private lines for fire protection service shall be pressure tested to a minimum 200 psi in accordance with NFPA standards. The pressure gauge used in the hydrostatic test shall be calibrated in increments of 10 psi or less. At the end of the test period, the leakage will, at the request of the Inspector, be measured with an accurate water meter.

Allowable test leakage quantities per 1,000 feet of pipeline in gallons per hour are indicated in the following table:

Avg. Test Pressure-psi	**Pipe Diameter - Inches**				
	4	**6**	**8**	**10**	**12**
150	0.37	0.55	0.74	0.92	1.10
175	0.40	0.59	0.80	0.99	1.19
200	0.43	0.64	0.85	1.06	1.28
225	0.45	0.68	0.90	1.13	1.35
250	0.47	0.71	0.95	1.19	1.42

All visible leaks are to be repaired regardless of the amount of leakage and the line may be required to be rechlorinated as determined by the City.

After all underground utility construction and final grading is complete, water lines will be re-tested under working pressure to confirm no loss of pressure within a 15 minute test period before final acceptance by the City.

6.07 REPAIR OF WATER LINES

A. Joint Leaks

Joint leaks shall be repaired as required by the City.

B. Breaks or Punctures

Line breaks or punctures shall be repaired with a full circle repair clamp or other methods as approved by the City.

C. Splits or Blow Outs

Line splits or blowouts shall be repaired by replacing the damaged section with equivalent pipe material with a ductile iron mechanical joint solid sleeve at each end.

For pipe of different outside diameter and/or materials and asbestos cement, use an approved transition coupling with different end diameters sized specifically for the pipe materials and pipe outside diameter at each end.

D. Service Line Repairs

Service line repairs shall be repaired as follows:

- A water service line severed between the water main and the water meter shall be repaired using new type K copper tubing and bronze or brass three-piece compression unions.
- A corporation stop pulled out of a PVC pipe water main shall have a new service saddle and a new corporation stop installed on the water main.
- A corporation stop pulled out of a ductile iron pipe water main shall have a full circle repair clamp placed over the old tap hole. A new tap shall be made and a new corporation stop installed on the water main. A tapped repair clamp is also acceptable.

6.08 ACCEPTANCE OF WATER SYSTEM

A. Residential

The water system must be accepted by the City in conformance with the SCRD prior to approval of any subdivision Final Plat. The water system shall be 100 percent complete, including testing, prior to Final Plat recording unless approved by the Planning Commission. NO TEMPORARY OR PERMANENT CERTIFICATE OF OCCUPANCY SHALL BE SIGNED UNTIL THE WATER SYSTEM IS 100 PERCENT COMPLETE AND ACCEPTED BY THE CITY. Formal acceptance of water main systems shall be by City Council Resolution upon the request of the developer and upon submission and approval of “As Built” drawings. The developer shall be responsible for all maintenance and repairs to the system until formal City Council acceptance.

B. Non-Residential

All non-residential water mains that serve only one property shall be privately maintained by the property owner. The City will accept water mains in conformance with the SCRD that serve multiple properties upon the owner’s request. Such acceptance includes the submission and approval of “As Built” drawings and, if necessary, Plats of Corrections for easements. Formal acceptance of water mains to be dedicated to the City shall be by City Council Resolution action. The developer/owner shall be responsible for all maintenance and repairs to the system until formal City Council acceptance. The water system must be accepted by the City and shall be 100 percent complete, including testing, prior to the issue of a Certificate of Occupancy.

SECTION 7.00

SANITARY SEWER

7.01 GRAVITY SEWER MAINS

A. General Design Criteria

Sanitary sewer construction shall be in accordance with the latest edition of the TDEC "Design Criteria for Sanitary Sewer Systems." If discrepancies are found between the TDEC and City requirements, the more stringent shall apply.

(1) Location

All public sanitary sewer mains shall be located in dedicated street right-of-ways and/or in dedicated easements with a minimum width of 10 feet, centered about the pipe. An easement of 15 feet shall be required where the depth is greater than five feet, but less than eight feet. An easement of 20 feet shall be required where the depths below finished grade is greater than eight feet. Special conditions may warrant greater widths as required by the City. No part of any structure, including foundations and overhangs, are permitted in an easement.

(2) Creek Crossing

Proposed sewers shall be designed to a proper depth such that all creek crossings shall have at least three feet of cover between it and the streambed unless otherwise approved by the City. Concrete encasement and ductile iron pipe with mechanical joints, in accordance with Standard Detail 7.01, shall be required at stream crossings. All stream crossings will include check dams in the conduit trench on both sides of the crossing.

Sanitary sewer mains shall not be installed under any part of water impoundments, such as detention/retention basins, except as approved by the City.

B. Sizing

(1) Minimum Size

The minimum size of public gravity sanitary sewer mains shall be eight inches.

Sewer extensions should be designed for projected flows even when the diameter of the receiving sewer is less than the diameter of the proposed extension.

Pipe diameter changes shall occur in a manhole with the invert of the larger pipe lowered sufficiently to maintain the same energy gradient. An approximate method of

securing these results is to place the eight-tenths depth point of both sewers at the same elevation.

(2) Flow Factors

New sewer systems shall be designed based on the maximum potential development of the contributory area as determined in consultation with the City. If a proposed use is know to have a design flow greater than listed below, the greater flow factor shall be used; otherwise the following flow factors shall be used:

Land Use	Flow Factor
Residential	350 gpd/dwelling unit/24 hour period
Office and Institutional	25 gpd/employee/8 hour shift
Commercial	150 gpd/1,000 square feet building space/12 hour period
Industrial	25 gpd/employee/8 hour shift

These figures cover normal infiltration; however, an additional allowance shall be made where conditions are unfavorable. Additional flow factors and requirements should be reviewed in Appendix 2-A of the latest edition of the TDEC handbook on "Design Criteria for Sanitary Sewer."

For existing sewer systems, an additional allowance shall be made to the above flow factors where the existing flow exceeds these values.

The relation of peak-to-average daily flow shall be as follows:

$Q_{max}/Q_{avg.}$	Flow (gpd)
4.0	3,000 or less
2.5	Greater than 3,000

Sanitary sewers shall be designed to carry the projected peak flow at no more than three-fourths full. The recommended minimum velocity for sanitary sewer lines is three fps. The absolute minimum velocity allowed is two fps.

C. Slopes

(1) Minimum Slope

The minimum slope for public sanitary sewers shall be as follows:

Main Size (in.)	Minimum Slope (ft/100 ft)
8	0.260
10	0.193
12	0.151

Minimum slope values are based on a Manning's η value of 0.0115. Minimum slopes for larger size pipes are provided in the latest edition of the TDEC "Design Criteria for Sanitary Sewers."

The minimum slope for the uppermost reach of a sewer line where no future extensions are planned shall be one percent regardless of sewer line size.

(2) Maximum Slope

The maximum slope for sanitary sewers is 18 percent and the maximum velocity is 15 fps. These limits may be exceeded with the approval of the City and the incorporation of the following provisions:

a. High velocity manholes, in accordance with Standard Detail 7.02 shall be used on all sewers with a slope greater than 18 percent.
b. Concrete anchors shall be installed on all sewers of greater than 18 percent slope at the following spacing:
    1. Not over 36 feet center to center on grades from 18 percent to 25 percent.
    2. Not over 24 feet center to center on grades from 25 percent to 35 percent.
    3. Not over 16 feet center to center on grades exceeding 35 percent.

D. Installation

(1) Minimum Cover

Sanitary sewer mains shall be deep enough to serve the adjoining property and allow for sufficient slope in lateral lines. All sanitary sewer mains shall have the following minimum covers:

a. Two and one-half feet from the top of pipe to finished subgrade when under a roadway.
b. Two and one-half feet from the top of pipe to finished grade when outside a roadway.

The above requirements may be waived in exceptionable circumstances at the discretion of the City, in which case ductile iron pipe shall be installed.

(2) Sewer Depths

Materials for sewer mains to pipe invert depths of 12 feet below finished grade may be selected from Section 7.01E, Pipe Materials. Sewer mains greater than 12 feet in depth shall be Pressure Class 350 ductile iron or PVC C900 for the entire run between manholes.

(3) Excavation and Backfilling

Pipe trench excavation and backfilling shall be performed in accordance with Section 5.01. Pipe bedding shall be in accordance with Section 7.01F(6).

(4) Material Transitions

Transitions of pipe material shall occur only at manholes unless otherwise approved by the City.

(5) Horizontal Separation

Sanitary sewers shall be laid at least 10 feet horizontally apart from existing or proposed water mains. However, if the top of the sewer main is at least 18 inches below the bottom of the water main, a horizontal separation of at least three feet from the closest edges of the pipes is allowed. There shall be a minimum of five feet horizontal separation between sewer gravity mains and force mains unless otherwise approved by the City.

(6) Vertical Separation

Under normal conditions, water mains crossing sanitary sewers or storm sewers shall be laid to provide a vertical separation of at least 18 inches between the bottom of the water main and the top of the sewer.

Where a water main crosses over an existing sanitary or storm sewer and the vertical separation is less than 18 inches, the water main shall be encased in concrete or in one length of steel encasement ductile iron pipe centered at the point of crossing.

Where a water main crosses over a new sanitary or storm sewer and the vertical separation is less than 18 inches, the sewer line shall be constructed of water pipe for a distance of at least nine feet on either side of the point of crossing. The water line pipe shall have one pipe length centered at the point of crossing.

Where water mains cross under sewers, a minimum vertical separation of at least 18 inches shall be provided between the bottom of the sewer and the top of the water main. Both the water main and the sewer line shall be constructed of water line pipe with a length of water line pipe centered at the point of crossing. Adequate structural support shall be provided to prevent excessive deflection of joints and settling on and breaking the water mains.

(7) Grading of Easement

Sewer line easements shall be finished and graded smooth, free from rocks, boulders, roots, stumps, and other debris and seeded and mulched upon the completion of construction.

(8) Plugging

The downstream manhole (s) of a sanitary sewer line extension under construction shall be appropriately plugged to prevent the passage of groundwater, runoff and sediment into the sanitary sewer system. All water upstream of the plug shall be pumped out of the sanitary sewer line and all sediment and solids shall be removed and properly disposed of by the contractor. The plugs shall not be removed until the

entire upstream system is complete and the lines have been inspected by the City to insure that all possible points of inflow or infiltration have been secured and all debris removed.

E. Pipe Materials

(1) Ductile Iron Pipe

Ductile Iron Pipe shall be designed as per ANSI/AWWA C150 (A21.50) for a Pressure Class of 350 psi, laying condition Type 4 Trench.

Pipe joints shall be of the push-on type as per ANSI/AWWA C111/A21.11. Pipe lining shall be cement mortar with a seal coat of bituminous material, all in accordance with AWWA C104.

(2) Polyvinyl Chloride (PVC) Pipe

PVC pipe shall be made of PVC plastic as defined in ASTM D1784. PVC pipe shall have integral wall bell and spigot joints with rubber gaskets for the conveyance of domestic sewage. Fittings shall be made of PVC plastic as defined in ASTM D-1784. Fittings must be manufactured by pipe supplier or approved equal, and have bell and/or spigot configurations compatible with that of the pipe.

All pipe 15 inches in diameter and less shall have a maximum Standard Dimension Ration (SDR) of 35 in accordance with ASTM D3034. Where lying conditions so warrant, and in accordance with manufacturer's recommendations, lower SDR values (stronger pipe) may be required.

PVC pipe meeting the requirements of AWWA C900 may be used for trench depths of 12 feet or greater. Pipe shall be Class 150, DR18, integral bell with strength equal to the pipe wall, cast iron, O.D., 18 feet lengths, with a solid elastomeric ring in accordance with ASTM F-477.

PVC pipes 15 inches in diameter and larger must be manufactured as defined in ASTM F794. Pipe strength shall be equal to or exceed that required for pipe less than 15 inches in size.

Installation shall consist of either Class I or Class II bedding material placed six inches below the pipe barrel and continuing to a minimum of six inches above the pipe in accordance with ASTM D2321.

F. Additional Requirements for Sewer Pipe Installation

The installation shall satisfy the requirements of the manufacturer and/or the following whichever is more stringent:

(1) Installation

Installation of PVC pipe shall follow the recommendations of ASTM D2321 "Underground Installation of Flexible Thermoplastic Sewer Pipe." Flexible pipe bedding and embedment material shall be either Class I or Class II. For semi-rigid pipe such as ductile iron pipe or PVC Truss Pipe, Class III materials may also be used. In any area where the pipe will be installed below existing or future ground water levels or where the trench could be subject to inundation, only Class I material shall be used for bedding and embedment.

(2) Specifications

The manufacturer's specifications or otherwise approved method shall be used in determining the stiffness class of the pipe to be installed so as to attain the required deflection control. The class of the pipe must be approved by the City prior to installation.

(3) Deflection

The maximum allowable deflection after installation shall be less than five percent of the pipe diameter. The mandrel (go/no-go) deflection test must be performed on each line prior to acceptance and no less than 30 days after installation.

(4) Pipe Joints

PVC pipe shall be produced with bell and spigot end construction. Joining will be accomplished by rubber gasket in accordance with manufacturer's recommendation, unless otherwise directed or approved by the City. Flexible watertight elastomeric seals in accordance with ASTM D3212 may also be used. Each pipe length shall be clearly marked with information including pipe size, profile number and class number. The pipe shall be installed so that the manufacturer markings are positioned on the topside of the pipe.

(5) Trench Width

A minimum trench width shall be the pipe outside diameter plus 16 inches.

(6) Bedding

Bedding and embedment material classifications shall be generally defined as follows and in accordance with ASTM D2321 and Standard Detail 7.12.

CLASS I – Angular, (one-fourth to one and one-half inches) graded stone, including a number of fill materials that have regional significance such as crushed stone and crushed gravel. The material shall be non-plastic with 100 percent passing the one and one-half inch sieve, less than 50 percent passing the # 4 sieve and less than five percent passing the # 200 sieve.

CLASS II – Coarse sands and gravels with maximum particle size to one and one-half inches, including variously graded sands and gravels containing small percentages of fines, generally granular and non-cohesive, either wet or dry. Material shall be non-plastic with 100 percent passing the one and one-half inch sieve, 50 percent more or less of course fraction passing the # 4 sieve and less than five percent passing the # 200 sieve.

CLASS III – Fine sand and clayey gravels, including fine sands, sand-clay mixtures, and gravel-clay mixtures. Material may be slightly plastic with plasticity index (PI) less than seven containing 12 percent to 50 percent fines passing the # 200 sieve and 100 percent passing the one and one-half inch sieve and 50 percent more or less of the course fraction passing the # 4 sieve.

CLASS IV – Silt, silty clays, and clays, including inorganic clays and silts of medium to high plasticity and liquid limits. These materials are not recommended for embedment.

The bedding (four inch minimum/six inch minimum over rock) and embedment materials shall be per ASTM D2321. The embedment materials shall be installed from trench wall to trench wall and from the invert to a minimum of six inches above the crown of the pipe. Minimum distance between outside pipe and edge of trench wall shall be eight inches.

Class II and III bedding and embedment material shall be compacted to a minimum of 90 percent Standard Proctor density. All sewer lines in the roadway or within three feet of the back of curb (measured from the center of utility) shall be backfilled above embedment material to within one foot of finished ground elevation with # 57stone.

(7) Check Dams

Check dams shall be installed in the bedding and backfill of all new or replaced sewer lines to limit the drainage area subject to the french drain effect of gravel bedding. Major rehabilitation projects should also include check dams in the design. Dams shall consist of compacted clay bedding and backfill at least three feet thick to the top of the trench and cut into the walls of the trench two feet. Alternatively, concrete may be used, keyed into the trench walls. Dams shall be placed no more than 500 feet apart with the preferred location upstream of manholes. All stream crossings will include check dams on both sides of the crossing.

(8) Shoring

Proper sloping of banks or use of shoring shall be required on all excavations in accordance with applicable OSHA guidelines. If hydraulic jack shoring is utilized for trench walls, it shall not interfere with placement of the pipe or embedment material.

7.02 SEPTIC SYSTEMS

Septic systems shall meet the requirements specified in the Oak Ridge Subdivision Regulations.

7.03 FORCE SEWER MAINS

A. Sizing

The minimum pipe size for force sewer mains is four inches in diameter.

B. Materials

(1) Ductile Iron Pipe

Ductile iron pipe shall be designed as per ANSI/AWWA C150 (A21.50) for a pressure class of 350 psi, laying condition Type 3 trench. Pipe shall be manufactured as per AWWA C151 in 18-foot lengths. Pipe lining shall be cement mortar with seal coat of bituminous material, all in accordance with AWWA C104.

(2) Pipe Joints

Pipe joints shall be the push-on type as per ANSI/AWWA C111/A21.11. All solvent weld joints shall be prohibited.

(3) PVC Pipe

Pipe shall be Class 200 PVC SDR 21 integral bell with strength equal to the pipe wall, with a solid elastomeric ring in accordance with ASTM F477. If design conditions warrants, pipe of greater strength may be required.

(4) Pipe Fittings

Pipe fittings shall be ductile iron designed and manufactured as per AWWA C110. Sizes of fittings up to and including 12 inches shall be designed for an internal pressure of 250 psi; larger size fittings shall be designed for an internal pressure of 150 psi.

Pipe fittings shall be mechanical join type and lined with cement mortar with a seal coat of bituminous material, all in accordance with AWWA C104.

C. Force Main Installation

(1) PVC Pipe

PVC pipe will require the installation of an insulated solid copper locator wire, minimum size # 12, installed with the pipe. The wire shall be installed under the pipe

while the pipe is being placed in the ditch line. Joint lubricant shall be in accordance with manufacturer's recommendation.

(2) Reaction Blocking

Reaction blocking for all fittings or components subject to hydrostatic thrust shall be securely anchored by the use of concrete thrust blocks poured in place. The reaction volumes are shown in Standard Detail 6.07. No concrete shall interfere with the removal of fittings. Material for reaction blocking shall be 3,000 psi concrete.

(3) Force Main Pipe Cover

Force mains shall be installed in accordance with Section 7.01D(1).

(4) Bedding

No force main shall be laid on rock until the rock has been covered with a minimum of six inches of fine graded stone. PVC force mains shall be bedded in # 57 stone with three inches minimum under and six inches minimum over the main in accordance with Standard Detail 6.01. Ductile iron pipe may optionally be bedded with Class I, II or III material in accordance with ASTM D2321 and Section 7.01F(6).

(5) Valves

Air release valves shall be installed at all major high points of force mains and other locations as directed by the City.

Force main valves shall be installed at maximum intervals of 2,000 feet or as determined by the City, and shall have valve box caps marked "SEWER." Force main valves shall be Teflon coated resilient seat wedge gate type.

(6) Receiving Manhole

The receiving manhole for a force main shall receive an interior coating of Koppers "Super Service Black" or an approved equal with a total dry film thickness of 10 mils. All nicks and scratches shall be touched up prior to acceptance of the manhole. The force main shall discharge at the invert of the receiving manhole unless otherwise approved by the City and shall be as close as possible to 180 degrees from the outlet pipe.

(7) Identification

Force mains shall be appropriately identified upon installation so they will not be confused with potable water lines. Warning tape shall be applied to the top of pipe clearly marked "SEWER."

7.04 MANHOLES

A. Design

(1) Spacing

Manholes shall be spaced at a maximum distance of 300 feet unless otherwise approved by the City, not to exceed 400 feet.

(2) Size

Manholes for sewers less than 21 inches in diameter shall be a minimum of four feet inside diameter. Manholes for sewers 21 inches in diameter or greater shall be five feet inside diameter.

B. Installation

(1) Inverts

Manholes shall be installed at each deflection of line and/or grade. The flow channel through manholes should be smooth and shall conform to the shape and slope of the entering/exiting sewer line. Invert troughs shall have a minimum fall of one-tenth foot and provide a consistent slope from the pipe outlet to the inlets with a maximum fall of up to four inches. Invert benches shall have a float finish with a uniform slope of two and one-half inches, plus or minus one inch, from the high point at the manhole wall to the low point at invert trough. A one-fourth inch radius shall be provided at the edge of the bench and trough.

(2) Manhole Drops

Outside drops shall be used when free drops exceed 24 inches in accordance with Standard Detail 7.03.

(3) Finished Top Grade

Manholes not located in roadways but within right-of-way limits shall have a top elevation a minimum of one inch and a maximum of six inches above finished grade unless otherwise approved by the City. Manhole tops located outside the right-of-way shall have a minimum of six inches and a maximum of 18 inches above finished grade, unless otherwise approved by the City.

Manhole tops shall be elevated above the 100-year flood plain elevation or shall be equipped with watertight frames and covers per Standard Detail 7.06.

(4) Manhole Foundations

All manholes shall have six-inch, 3,000 psi concrete bottoms resting on a minimum of six inches of # 57 stone. Sewer mains shall enter and exit radially through the manhole.

(5) Manhole Joints

Manhole sections shall be joined by unrolling the butyl sealant rope directly against base of spigot without stretching per Standard Detail 7.04. The rope should be overlapped from side to side to provide one thickness. Leave protective wrapper attached until sealant is entirely unrolled against spigot. After joining manhole sections, apply the butyl sealant sheet around the outside perimeter of the joint.

(6) Manhole Connectors

Pipe to manhole connectors shall be of the resilient type and conform to ASTM C923. The manhole entrance coupling with the entry pipe shall be fitted with a resilient connector insert. Specially designed flexible products may be approved for use in adding a pipe entrance to a previously installed manhole where materials meet the requirements of ASTM C923. Rigid cement or synthetic type grouts are not acceptable as a seal between manhole and entry pipe. Opening for connections to existing manholes shall be made by core drilling.

(7) Exterior Surface

The exterior surface of all new manholes shall be coated with a minimum of one coat of waterproofing material during vacuum testing procedures. The coating and sealing material shall be DRYCON waterproofing/sealer (gray and white) as manufactured by IPA Systems, Inc., PRECO waterproofing/sealer (gray and white) as manufactured by FOSROC PRECO Industries, LTD., or an approved equal.

C. Materials

(1) Precast Concrete Manholes

All manholes except shallow manholes shall have eccentric cone sections. Precast concrete manholes shall meet ASTM C478 as to design and manufacture. For precast concrete manholes, see Standard Detail 7.04. Brick manholes shall be allowed.

Precast base sections shall be cast monolithically without construction joints or with an approved galvanized or PVC waterstop in the cold joint between the base slab and the walls. The bottom step in base sections shall be a maximum of 26 inches from the top of the base slab. Joint surfaces between bases, risers and cones shall be manufactured to the joint surface design and tolerance requirements of ASTM C361. The minimum height of the joint shall be four inches.

Precast riser sections shall have a minimum lay length of 16 inches.

Precast eccentric cone sections shall have a minimum inside diameter opening at the top of 27 inches. The width of the top ledge shall be no less than the thickness required for the cone section.

Precast transition cone sections shall provide an eccentric transition from 60 inch and larger manholes to 48-inch diameter risers, cones and flat slab top sections. The minimum slope angle for the cone wall shall be 45 degrees.

Precast flat slab top sections shall have a minimum circular opening at the top of 27 inches and shall be designed for HS-20 traffic loadings in accordance with ASTM C478.

Precast grade rings shall be used to adjust frames and covers to finished grade. No more than 12 vertical inches of grade rings will be allowed per manhole. Grade rings shall conform to ASTM C478 and shall be no less than four inches in height. Clay brick shall only be used for grade adjustment on slopes or in paved areas where precast concrete grade rings or gray iron adjustment rings cannot be used to achieve the required grade.

Flexible joint sealants shall be butyl rubber based conforming to Federal Specifications SS-S210A, AASHTO M-198, Type B – Butyl Rubber and as follows: maximum of three percent volatile matter and suitable for application temperatures between 10 and 100 degrees Fahrenheit. Material shall have a nominal cross section dimension of one inch for four feet diameter manholes and one and one half inch for five feet and six feet diameter manholes.

Lift inserts and holes shall be sized for a precision fit with the lift devices, complying with OSHA 1926.704, and not penetrate through the manhole wall. Lift loops shall be ASTM A416 steel strand. Lifting loops made from deformed bars are not allowed. Lifting devices for handling precast components shall comply with OSHA Standard 1926.704.

Epoxy gels for interior patching of wall penetrations when used shall be a two component, solvent-free, moisture-insensitive, high modulus, high-strength, structural epoxy paste adhesive meeting ASTM C881, Type I and II, Grade three, Class B and C, Epoxy Resin Adhesive.

(2) Frames and Covers

Manhole frames and covers shall be gray iron, Class 30 unless otherwise specified, meeting AASHTO M-105 with “Sanitary Sewer” cast into the cover and in accordance with Standard Detail 7.05. Frame and cover shall be capable of supporting a HS-20 wheel load.

Manhole frames rings and covers shall be put in place with butyl sealant rope and banding in accordance with Standard Detail 7.04.

(3) Watertight Frames and Covers

Watertight manhole frames and covers shall be constructed at all locations within the 100-year flood plain or in other areas subject to periodic flooding as directed by the City in accordance with Standard Detail 7.06.

(4) Manhole Steps

Manhole steps shall be furnished with the precast sections. The steps shall be Copolymer Polypropylene Plastic reinforced with a one-half inch diameter grade 60 bar and have serrated tread and tall end lugs. Step pullout strength shall be 400 pounds minimum when tested according to ASTM C497. Steps shall be set 16 inches on center. Holes for the installation of manhole steps shall not project through the manhole wall and there shall be a minimum of one-inch wall thickness from the deepest penetration of the step installation hole and the outside wall. Steps shall be at least 10 inches clear width and shall project at least four inches from the wall into which it is embedded. Steps shall be secured to the wall with compression fit in tapered holes or cast in place. Steps shall not be vibrated or drive into freshly cast concrete or grouted in place.

7.05 SERVICE CONNECTIONS

A. Materials

(1) PVC Pipe

PVC pipe shall be a minimum of SDR 35 in accordance with ASTM D3034 for six-inch services in accordance with Standard Detail 7.08.

(2) Service Saddles

Service saddles for sanitary sewer services shall be “ROMAC CB” sewer saddles or equal consisting of a virgin SBR gasket compounded for sewer service, a ductile iron saddle casting, a type 304 stainless steel adjustable strap for fastening the gasket and the saddle casting to the sewer main and a type 304 stainless steel adjustable circle clamp for securing the service line into the SBR gasket.

The opening in the sewer main for the “ROMAC CB” sewer saddle shall be cut with a hydraulically driven or a pneumatically driven circular tapping saw of the same nominal diameter as the sewer service line.

B. Installation

(1) Service Taps

All service connections to existing city sanitary sewer mains shall be made by the City Public Works Department unless otherwise approved by the City.

A bell tee or wye fitting shall be provided at all known or planned service connection points on new sanitary sewer mains.

Service taps into mains shall be made on the top quarter of the main with the wye saddle angled with the direction of flow in the main in accordance with Standard Detail 7.08.

(2) Bedding

It is recommended that all service lines be bedded with Class I bedding from four inches below the service line to six inches above the service line.

(3) General Requirements

Service connections to the main lines shall be perpendicular to the main line. Four-inch lines shall have a minimum fall of one-fourth inch per foot and six-inch lines shall have a minimum fall of one-eighth inch per foot unless otherwise approved by the City. Cleanouts shall be required on all sewer services with a maximum spacing of 80 feet. A cleanout shall be placed on all service lines two feet inside property lines. All cleanouts in new subdivisions shall extend a minimum of three feet above finished grade until the service connection is made. See Standard Detail 7.07 for cleanout details. Sewer cleanouts located in paved areas must have cast iron risers and brass caps.

All service connections into a manhole shall be made by core drilling and fitted with a resilient connector insert unless otherwise approved by the City. All sewer laterals under public streets shall be a six-inch minimum diameter.

Service lines, which are connected into manholes, shall be terminated at the bottom and three inches inside the manhole wall. Service lines shall not be installed through manhole cone sections or manhole joints. No common sewer laterals are allowed.

7.06 TESTING AND INSPECTION

All materials used must have a preliminary inspection by the City before materials are used for construction purposes. Material not meeting these specifications will be rejected and such materials shall be immediately removed from the job.

Sanitary sewer lines shall be free and clean from obstructions and shall be visually inspected from every manhole to ensure all lines exhibit a fully circular pattern. Flexible pipe shall be tested with a mandrel to assure less than five percent deflection after backfilling operations

have been completed for at least 30 days. Lines, which do not exhibit a true line and grade or have structural defect, shall be corrected.

The contractor shall furnish all materials, labor and equipment to perform all sewer system testing to the satisfaction of the City. Low pressure air testing shall be performed on new or rehabilitated gravity flow sewer lines and vacuum testing shall be performed on all new or rehabilitated manholes.

Low-pressure air testing shall be performed in accordance with ASTM C828 when all laterals or stubs are installed on the line, after the main has been backfilled to finish grade, after completion of all other underground utility construction and after final grading of the area is complete. Plugs shall be installed at each manhole and service lateral to seal off the test section. The line will be pressurized with a single hose and monitored by a separate hose connection from the plug. Air then shall be slowly introduced into the sealed line until the internal air pressure reaches four psi. The air pressure shall then be allowed to stabilize for a minimum of two minutes at no less than three and one-half psi. When the pressure reaches three and one-half psi, the time required for the pressure to drop one psi will be observed and recorded. The line shall be termed “acceptable” if the pressure does not drop more than one psi in the time prescribed for the test by ASTM C828 and Standard Detail 7.09.

If the pipe section fails to meet these requirements, the source of leakage shall be determined and repaired. The pipe section shall then be retested to meet the specified requirements.

All new or rehabilitated manholes shall be vacuum tested to assure water-tightness before backfilling. The exterior surface must be painted with waterproofing material as the vacuum is being pulled to seal the pores of the concrete. Vacuum testing procedures for manholes shall be in accordance with Appendix 2C of the TDEC “Design Criteria” except that a final vacuum testing of manholes will also be required after completion of all underground utility construction and final grading.

As an alternative to field application of waterproofing material, precast manhole sections can be coated and vacuum tested at the factory if certification is provided that the sections have been tested and meet the requirements of Appendix 2C of the TDEC “Design Criteria.” Field vacuum testing of manholes will also be required after completion of all underground utility construction and final grading to assure that the installed manhole is watertight.

7.07 REPAIR OF SANITARY SEWER LINES

The repair of damaged sanitary sewer lines shall be as follows:

PVC Pipe – replace damaged section of sewer with PVC pipe cut to fit with maximum one-fourth inch opening at joints and install a Fernco coupling or repair coupling at each end as approved by the City.

DIP – replace damaged section with a solid sleeve mechanical joint coupling at each end.

Repairs to new lines, not yet accepted by the City, shall be tested in accordance with Section 7.06.

All damage to existing City owned mains shall be repaired by the Pubic Works Department at the expense of the developer or contractor causing the damage.

7.08 SEWAGE PUMP STATIONS

A. General Requirements for Sewage Pump Stations

These specifications are provided as a basis for design of sewage pumping stations for the City. All proposed deviations from these specifications shall be submitted in writing (three copies) to the City for review and consideration to allow a decision on the issuance of a written variance prior to final plans being completed and submitted for approval.

Gorman-Rupp seven feet by ten feet prepackaged above ground insulated suction lift stations utilizing the "T" series pumps are to be utilized whenever possible. The conditions supporting the selection of submersible pumps shall be submitted in writing (three copies) to the City for review and consideration to allow a decision on the issuance of a written variance prior to completing the final design.

In the event that the Gorman-Rupp suction lift station cannot be used due to engineering considerations, a Flygt submersible pumping station shall be utilized.

Sewage pumping stations shall be located as far as practicable from present or proposed built-up residential areas, and an all-weather paved access road shall be provided. Noise control, odor control, ease of maintenance, and station architectural design shall be taken into consideration. The site for stations shall be of sufficient size for future expansion or addition.

The stations operational components shall be located above the 100-year floodplain or shall be adequately protected against 100-year flood damage.

Where the wet well is at a depth greater than the water table elevation, special provisions shall be made to ensure watertight construction of the wet well. Any connections to the pump station shall be made at an elevation higher than the maximum water table elevation, where possible. Provisions shall be made to facilitate removing pumps, motors, and other equipment, without interruption of system service.

The site shall be graded to drain away from the pump station and to remove storm water runoff from the site in a non-erosive manner.

The site shall be stabilized by the use of crushed stone, low maintenance ground cover or other suitable pre-approved material. If the pump station is visible from residential lots where homes are or will be in the future, evergreen shrubs shall be planted to screen the pump station, but shall not interfere with proper access or maintenance.

The site shall have a frost-free water hydrant located near the pump station. This hydrant shall be metered and installed with an approved backflow preventer, and shall be connected to the City water system.

The site shall have adequate turn around space for service vehicles and provide a 12 feet wide (minimum) access road to the site, with grades not to exceed 12 percent unless otherwise approved by the City.

B. Pumping Rates and Number of Units

A minimum of two pumps shall be provided, each capable of handling the expected maximum flow. Pump head curves shall be submitted and approved by the City with the submittal of design plans. Three copies of system plans and specifications are to be submitted.

When the station is expected to operate at a flow rate less than one-half the average design flow for an extended period of time (six months), the design shall address measures taken to prevent septicity due to long holding times in the wet well.

Consideration shall be given to the use of variable-speed or multi-staged pumps, particularly when the pump station delivers flow directly to a treatment plant, so that sewage will be delivered at approximately the same rate as it is received at the pump station.

Pumps shall be sized to produce a minimum velocity in the force main of two fps. Each pump shall be supplied with a run time meter to indicate the cumulative running time of each pump individually.

C. Piping Valves

Pumps shall be capable of passing spheres of at least three inches in diameter. Pump suction and discharge piping shall be at least four inches in diameter. Suction and discharge piping shall be Pressure Class 350 ductile iron flanged pipe and as manufactured under AWWA C151. A check valve and either a resilient seat gate or clear throat type plug valve shall be provided for the discharge piping of each pump. A wye with a four-inch flanged resilient seat gate valve shall be installed on the common discharge line in the valve vault.

D. Priming

Pumps shall be so placed that under normal operating conditions they will operate under a positive suction head (except for suction lift pumps).

E. Controls and Control Panels

(1) General

Controls shall be either a Consolidated Electric model D-152 or a Gorman-Rupp EPS. These controllers must utilize their appropriate submersible level transducer. Controls must be protected from voltage and lightning surges by the manufacturers surge protectors. Full electrical schematic and parts list must be approved by the City prior to construction (three copies required).

All control panels are the have phase monitors, full size Square-D starters, separate Square-D three pole breakers for each pump and single pole control breaker, automatic pump alternation, Hand/Off/Automatic for each pump, high and low water alarms with audible and warning lights, and silence button. All control panels are to have a thermostat controlled condensation heater installed within the panel.

Incoming service shall have a stainless steel NEMA 3R service disconnect located outside the station and in direct view of pumping equipment.

A backup power supply, such as a battery pack with an automatic switchover feature, should be provided for the alarm system, such that a failure of the primary power source will not disable the alarm system. Test circuits should be provided to enable the alarm system to be easily tested and verified that it is in good working order.

Control panels shall be mounted on four-inch diameter galvanized steel posts.

(2) Submersible Pumping Stations

Controls for submersible pumping stations shall be enclosed in a NEMA 4X stainless steel enclosure. This enclosure is to have a dead front panel so that all control devices can be locked. This panel is to be located a minimum of three feet from the wet well and the bottom of the panel shall be at least three feet from the surface elevation. A typical submersible pumping station layout is shown on Standard Detail 7.10.

(3) Above Ground Suction Lift Station

Controls for above ground suction lift stations shall be enclosed in a NEMA 3R enclosure. This enclosure is to be located within the station itself. Failure lights and horns are to be located outside the station. A typical above ground suction lift station layout is shown on Standard Detail 7.11.

F. Materials

In the selection of materials, consideration shall be given to the presence of hydrogen sulfide and other corrosive gases, greases, oils, and other materials frequently present in sewage. No carbon steel hardware will be accepted. Station components shall be non-corroding in natures, i.e., aluminum, stainless steel, or fiberglass. Only the pumps, the suction and discharge piping and assorted valves may be painted iron.

G. Wet Well

The wet well shall be pre-cast concrete wet well sections conforming to ASTM C478, latest revision. Wet wells shall be in conformance with Section 7.04C(1) in this document and the following specifications:

1. Openings shall be provided for the required number and size pipes and shall be marked to insure installation at proper locations.

2. Coatings

    a. All concrete components including both inside and outside surfaces of all new wet wells shall be coated with one coat of specified coating and sealing material. Coatings shall be applied and cured to required thickness and in strict accordance with all coating manufacturers' requirements.

b. Coating and sealing material shall be:

- DRYCON water proofing/sealer (gray and white) as manufactured by IPA Systems, Inc.
- PRECO Waterproofing/sealer (gray and white) as manufactured by FOSROC PRECO Industries, LTD.
- The level transducer must be located within a PVC or stainless steel pipe large enough for the transducer to slide up and down. This pipe must be strapped to the wall of the wet well at least every six feet. The pipe must have a stainless steel bolt through the bottom to hold the transducer one-foot off the bottom of the well. The pipe shall be located so that the transducer can be pulled and inserted without entering the wet well.

H. Electrical

Electrical service to all pump stations shall be 208Y/120 or 480Y/120 Volt, 4-wire. The electrical power entrance shall be through a meter base, followed by a NEMA 3R heavy duty, single throw, three pole, fusible safety switch with a solid neutral, enclosed in a stainless steel enclosure. All electrical components shall be suitably sized to be capable of service with both pumps running.

All electrical components, including control panel shall be sealed off in accordance with the National Electrical Code. The control panel at submersible lift station shall have three conduits running from the wet well, each sized appropriately for the conductor within. Each motor lead shall be within its own conduit, with the transducer wire in its own conduit. All electrical systems and components in enclosed or partially enclosed spaces where flammable mixtures may occasionally be present shall comply with N.E.C. requirement for class one, division one locations.

I. Ventilation

All pump stations and wet wells shall be vented. Switches and thermostats for heating and ventilating shall be marked. Automatic controls shall be used where intermittent operation is used. The fan wheel shall be fabricated from non-sparking material. Wet well ventilation shall consist of a breather vent with no electrical or mechanical ventilation, and covered with one-eighth of an inch galvanized hardware cloth secured by stainless steel bands.

J. Suction Lift Stations

(1) Priming

Conventional suction-lift pumps shall be the T3 or T4 series self-priming type pumps, as demonstrated by a reliable record of satisfactory operation. The maximum recommended lift for a suction lift station is 15 feet, using pumps of 200 gpm capacity or less.

(2) Capacity

The capacity of suction lift pump stations shall be limited by the net positive suction head and the specific speed requirements, as stated on the manufacturer's pump curve, for the most severe operating conditions.

(3) Air Relief

All suction lift stations must be provided with an air relief line on the pump discharge piping. This line should be located at the maximum elevation between the pump discharge flange and the discharge check valve to ensure the maximum bleed-off of entrapped air. Air relief piping shall be sized appropriately. A separate air relief line shall terminate in the wet well, and be open to the atmosphere.

Air relief valves shall be provided in air relief lines on pumps not discharging to gravity sewer collection systems. The air relief valve shall be located as close as practical to the discharge side of the pump.

K. Submersible Pumping Stations

KSB Corporation shall manufacture all submersible pumps for design heads in excess of capabilities of Flygt pumping equipment. These pumps shall be designed for the pumping of wastewater.

(1) Pump Removal

Submersible pumps shall be readily removable and replaced without dewatering the wet well or requiring personnel to enter the wet well. Continuity of operation of other units within the station shall be maintained.

Submergible stations shall be equipped with a minimum of a three-eighths inch stainless steel aircraft cable and stainless steel guide rails for the lifting and setting of pumps.

(2) Controls

Either the Gorman-Rupp Company or Consolidated Electric Company shall manufacture the control panel. These controls shall be located outside the wet well and suitably protected from weather, humidity, and vandalism.

(3) Valves

All control valves on the discharge line of each pump shall be placed in a convenient location outside the wet well in a separate pit and be suitably protected from weather and vandalism. Aluminum doors over the valve pit shall be installed. See Standard Detail 7.10 for additional valve box requirements.

(4) Submergence

Positive provision, such as backup controls, shall be made to assure submergence of the pumps.

L. Warranties and Documentation

(1) Warranties

The developer shall warrant to the City of Oak Ridge, that the pumps, motors and controls supplied shall be free of defects in workmanship and material for a warranty period of one year after formal City Council acceptance as specified in Oak Ridge Subdivision Regulations.

(2) Documentation

Documentation to be supplied to the City shall be three complete job specific Operation and Maintenance manuals, which include the following:

a. Cover Sheet Listing: pump manufacturer; source of repair parts, complete with address and phone number; operating conditions-rated capacity and TDH of each pump; model number, serial number, impeller diameter of each pump; all data plat information from each pump motor; data on other equipment included as components in the pump station.
b. Pump performance curve with operating conditions indicated on it.
c. Detailed dimensional drawings of the pump and pump base elbow.
d. Detailed dimensional drawings of the pump motor.
e. A control panel wiring diagram with brand and part number for each component in the cabinet.
f. Pump and motor installation and Service Manual.
g. Detailed information related to other components of the pump station.

M. Testing and Inspection

(1) Hydrostatic Testing of Force Main

a. All newly installed sewer pressure lines shall be tested before being placed in service. For piping in non-traffic areas, trenches may be backfilled as the pipe is laid, or where practicable and at the option of the contractor, trenches or bell holes may be left open for visual inspection during tests. Prior to conducting tests, all air shall be expelled from the pipe. Contractor shall install taps at high points of the line for the purpose of expelling air.
b. Pressure Test - A two-hour test shall be performed in accordance with AWWA C600 or as approved by the City on the pipe line between valves or temporary plugs at a test pressure of one and one-half times the working pressure of the pipe. The pressure rating of the pipe, fittings, valves and thrust restraints shall be at least 1.5 times the working pressure of the pipe. Any open trench or bell holes over dry joints may be backfilled following the

test. Where trenches have been backfilled prior to making tests, any leaks evident at the surface shall be uncovered. All leaking joints disclosed by this test shall be remade and tested. All pipe, fittings, valves, and other materials found defective under this test shall be removed and replaced at the contractor's expense.

c. Leakage Test

- A leakage test shall be performed on the pipeline concurrently with the pressure test between valves or temporary plugs at the constant test pressure as specified in "b" above. The test shall be run in accordance with AWWA C600.
- No pipe installation will be accepted if the leakage is greater than that determined by the following formula:

$$L = SD \frac{\sqrt{P}}{133200}$$

Where: L = allowable leakage, in gallons per hour
S = length of pipe tested, in feet
D = nominal diameter of the pipe, in inches
P = average test pressure during the leakage test, in pounds per square inch (gauge)

- The contractor shall provide a straight-walled test tank of adequate volume to supply the maximum allowable leakage to the system. The test tank shall have an accurate scale to measure the volume of water pumped to the nearest one-half gallon. Leakage through the system shall be measured as the volume of water pumped from the test tank to maintain the line segment being tested within five psi of the initial test pressure.
- Should test disclose leakage greater than the allowable amounts, the contractor, at his expense shall locate and repair any and all defects until the leakage is within the specified tolerance.
- All exposed piping, valves and appurtenances shall be pressure and leak tested in the accordance with the foregoing requirements except that they shall have the added requirement that no visible leaking, dripping or weeping will be allowed for the test segment to be accepted.

(2) Operational Test

Before the operational test is conducted, the required copies of the Operation and Maintenance Manuals shall be delivered to the City. All sewer mains shall be cleaned and cleared of dirt, mud, gravel and other foreign debris. Line cleaning shall be performed by the contractor using a sewer cleaning jet rodding truck or other acceptable method. This shall be performed at the expense of the contractor. The operational test shall check the proper functioning of the pumps and pump controls. All components including pumps and motor serial numbers shall be verified. All components of the pump station shall be checked to ensure that they are capable of performing the service intended to the complete satisfaction of the City, with the actual head and flow rate of each pump determined by on-site testing and certification by the manufacturer's representative. The contractor or developer shall ensure that a representative from the pump station equipment manufacturer is present at the operational test to review proper operation of the equipment with the City personnel. No station will be accepted without this review.

N. Developer's Responsibility

The developer shall furnish all materials, labor and equipment to perform all testing. Water for testing purposes will be provided by the City. The developer shall coordinate with the City for the use of water for testing. The developer shall be responsible for all associated cost for the operational test including payment for the manufacturer's presence at the operational test. The developer is also financially responsible for all internal electrical wiring and setting of the meter base by a licensed electrician. The City Electrical Inspector shall inspect all secondary wiring. A representative of the City Electric Department shall inspect all primary ditching, conduit installation, and transformer pad requirements.

7.09 ACCEPTANCE OF SANITARY SEWER SYSTEMS

All sanitary sewer systems must be accepted by the City for conformance with these SCRD prior to approval of any subdivision Final Plat, except that an acceptable bond, as referenced in the City Subdivision Regulations, Article V, development prerequisite to Final Plat approval, may be posted for incomplete items at Final Plat stage. The sanitary sewer system shall be at least 75 percent complete prior to Final Plat recording unless otherwise approved by the Planning Commission. NO TEMPORARY OR PERMANENT CERTIFICATE OF OCCUMPANCY SHALL BE ISSUED UNTIL THE SANITARY SEWER SYSTEM IS 100 PERCENT COMPLETE AND ACCEPTED by the City. Formal acceptance of sewer systems shall be by City Council Resolution upon the request of the developer and upon submission and approval of "As Built" drawings and Final Plat. The developer shall be responsible for all maintenance and repairs on the sewer system until formal acceptance by the City Council.

SECTION 8.00

STORM DRAINAGE

8.01 STORM SEWERS

A. Design

(1) Location

All public storm sewers shall be installed in dedicated street right-of ways or dedicated easements. Minimum widths of storm sewer easements shall be 10 feet for pipes up to 24 inches in diameter that are less than five feet in depth measured from the pipe invert, 15 feet for pipes greater than 24 inches up to and including 48 inches in diameter and a minimum of 20 feet for pipes greater than 48 inches in diameter. For multiple pipe installations, the width of the easement shall be as specified above, but measured from the centerline of each outside pipe. The City shall maintain only the storm sewer systems, which receive drainage from city right-of-ways, that cross the right-of-way or that lies in dedicated easements. The property owner shall maintain storm drainage systems located on private property. Storm sewers should be piped completely from the street to the nearest natural drainage ditch with appropriate easements provided. Beginning at the rear lot setback limits, open swales or ditches for conveying street drainage to a natural drainage ditch are acceptable. The design consultant shall submit two copies of all drainage calculations and an impact report, which outlines the downstream path and impact that the drainage will have on properties located outside the area of development.

(2) Sizing

Storm sewer systems shall be designed on the basis of the five-year storm for inlet spacing and street drainage pipe sizing, the 50-year storm for cross-street drainage, and the 100-year storm for flooding fringe areas. Cross street drainage systems should be checked for potential damage relating to the 100-year storm event. Pipes shall generally be designed to flow at less than seven-eighths full for open channel conditions. Pipes should be designed for inlet or outlet control using U.S. Department of Transportation, Federal Highway Administration procedures found in Hydraulic Engineering Circular Number Five and related publications. Other equivalent hydraulic design procedures may also be used for pipe design. Runoff rates shall be calculated by the Rational Method, SCS Method, or other acceptable calculation procedures. Runoff computations shall be based on rainfall data published by the National Weather Service for this area. For drainage areas less than 100 acres, the Rational Method is an acceptable procedure, which can be used to calculate peak runoff rates. For drainage areas requiring inflow and/or outflow hydrographs, such as for detention/sedimentation basins, procedures outlined in the SCS Technical Release 55 entitled “Urban Hydrology for Small Water sheds” will be acceptable. For drainage areas greater than 100 acres, an SCS Method or other recognized method is recommended to calculate rates or volumes of runoff.

Time of concentration, with a minimum time of eight minutes, shall be appropriate for the drainage area in question using the procedure outlined in Urban Hydrology for Small Watersheds Technical Release 55 or other commonly accepted hydrologic procedures.

Storm duration shall be set to equal the time of concentration for computing peak rates of flow using the Rational Method.

Computer software adaptations of these runoff calculation methods are acceptable provided that their data and graphic printout allow review and evaluation and an executive summary is provided detailing assumptions, approach method and results.

(3) Installation

All storm sewers shall be installed to provide a true line between structures. Structures shall be installed at each deflection of line and/or grade. The maximum length between drainage structures shall not exceed 400 feet for pipes 36 inches and less in diameter or 800 feet for pipes greater than 36 inches in diameter. Storm drainage structures (manholes, junction boxes, catch basins, etc.) shall be sized to accommodate inlet/outlet pipes based on the manufacturer's recommendation for precast structures. No inaccessible storm drainage structures shall be allowed unless approved by the City. Pipe shall not enter a structure through its corners. A reinforced concrete slab may be constructed over an enlarged structure or corbelled in the back wall to adjust to standard structure dimensions. The minimum cover for storm sewer pipe shall be two feet from finish subgrade to the top of pipe under a road and one foot under a no load-bearing area unless otherwise approved by the City. Storm drainage piping trench excavation and backfilling shall be in accordance with Section 5.00.

All storm drainage pipes shall be installed with Class I, II or III bedding material in accordance with Section 7.01(6), unless otherwise approved by the City.

(4) Pipe Outlets

At all storm water pipe inlets and outlets, headwalls and endwalls shall be provided. On all arterial roadways and on other high volume roadways as determined by the City, traffic safety headwalls shall be provided if located less than 30 feet from the edge of the through traffic lane that is approaching the headwall. Energy dissipaters shall be required at all discharge points and shall be properly sized to ensue that storm water is released at a non-erosive velocity. All riprap shall be designed and constructed with an engineering fabric between the energy dissipation pad and the natural ground. The storm water design shall account for the scour pool protection of the drainageway. Grouting of riprap may be required in areas of excessive velocity.

Riprap shall consist of field stone or rough quarry stone of approximate rectangular shape. The stone shall be of such quality that it will not disintegrate on exposure to water or weathering and shall be suitable in all other respects for the purpose intended. Riprap design shall be in accordance with SCS or other commonly accepted method.

Storm sewer channels and ditches shall be designed to carry the design flow at non-erosive velocities. Computation results indicating design velocities shall be provided

along with typical channel cross-sections. The maximum allowable cross-sectional velocity for grass channels is four feet per second.

The City may require additional information on the impact of discharge of storm water on adjacent properties.

(5) Street Drainage

Storm water shall not be allowed to flow across street intersections. Drainage structures shall be provided to intercept flow prior to the radius of an intersection or the design of the street shall indicate a continuous grade around the radius to allow flow to continue down the intersecting street. Curb inlets shall be spaced using a five-year storm frequency. Curb inlet opening efficiency shall be designed using the five-year storm frequency supported by calculations or data to show amounts of design flow intercepted and/or bypassed at each inlet. Maximum inlet spacing shall be 400 feet. Curb inlet spacing shall be verified by checking for gutter spread not to exceed eight feet during a two-year return frequency storm for non-arterial streets and six feet for arterial streets.

(6) Design Data

Design data shall be tabulated on construction drawings to show design flow rates and interception/bypass amounts for all storm drainage structures except at no-intercepting manholes and junction boxes. Drainage areas (in acres) shall be tabulated on drawings for all cross drains.

8.02 MATERIALS

A. Pipe Materials

(1) Reinforced Concrete Pipe

Reinforced concrete pipe shall be as per ASTM C76, Class III or Class IV with a minimum 15 inch inside diameter. Joints shall meet the requirements of ASTM C443 for flexible gasket joints.

(2) Corrugated Steel Pipe or Pipe-Arch

Corrugated steel pipe (CMP) installations shall be a minimum of 14 gauge. CMP or pipe-arch shall have a minimum 15-inch nominal diameter or equivalent pipe arch size of 17 by 13 inches and conform to AASHTO M36 with pipe ends having no less than two annular corrugations on each end. Bands for connecting pipes shall be corrugated to match the annular corrugations on pipe ends. Coupling bands shall be furnished with rubber o-rings or other gasket material to provide a watertight joint. If corrosive or acidic soils are encountered, pipe shall be fully bituminous coated in accordance with the requirements of AASHTO M190.

(3) High Density Polyethylene Corrugated Storm Sewer Pipe

Rigid (smooth interior wall) high-density polyethylene corrugated storm sewer pipe shall have a minimum 15-inch nominal diameter and may be used for special applications with specification submittal to the City. This pipe must be installed with Class I or Class II bedding in accordance with Section 7.01(6). This pipe material shall meet the product specifications of ASTM F667.

B. Structure Materials

All storm drainage structures such as manholes, inlets, junction boxes, catch basins, etc., shall be constructed of either brick, block, poured in place concrete, or precast concrete. All manholes shall be eccentric type or flattop.

(1) Clay Brick

Clay brick shall be rough, sound clay brick conforming to ASTM C32, Grade MS. The brick shall be laid with full shove joints, English bonded, filling up the joints with mortar. The thickness of the joints on the inside of the walls must not be more than three-eighths of an inch in width.

(2) Concrete Masonry Units

Concrete masonry units shall conform to ASTM C139 as to design and manufacture. Open cell concrete block shall be filled with concrete. The block or brick shall be embedded in a mortar bed to form a three-eights inch mortar joint.

(3) Precast Concrete Manholes

Precast concrete manholes shall meet ASTM C478 as to design and manufacture.

(4) Manhole Frames and Covers

Manhole frames and covers shall be cast iron or ductile iron with “STORM” cast in the cover and shall be in accordance with Section 7.04C(2). Castings shall be machined to give even and continuous bearing on the full length of the frame and shall be free of porosity and blowholes.

(5) Manhole Steps

Manhole steps shall be furnished and installed according to Section 7.04C(4).

(6) Catch Basin Grates

Catch basin inlets for street drainage shall have vaned grates and meet the TDOT and city standards. Vane grates are required unless otherwise approved by the City.

All curb inlet grates must be safe for bicycle traffic. No two-piece grates are permitted. Catch basin inlets outside of paved areas shall be a minimum of 24 inches by 24 inches. All grates shall be constructed of ductile iron.

8.03 PERFORMANCE CRITERIA

See Section 9-420 of the Erosion Control and Storm Water Management Ordinance for specific storm drainage performance criteria.

8.04 STORM WATER IMPOUNDMENTS

A. General

Storm water impoundments (sediment basins, detention/retention basins) shall be used for limiting the peak outflow from a developed site. The City shall receive executive summaries and design calculations including design hydrographs, storm routing, selection of the size and shape of the storage volume, and selection of the size and type of outlet device. Maintenance of storm water impoundments shall be the responsibility of the developer or, in special cases, the City of Oak Ridge, as specified in Section 9-441 of the Erosion Control and Storm Water Management Ordinance and the Administration Policy and Procedure Manual Number D-370.

Sediment basins and detention/retention basins shall not be constructed in an area, which conflicts with proper operation and maintenance of an existing or proposed utility line. Basins and impoundments shall not be constructed in areas of known karst activity unless designed to properly seal the basin.

B. Minimum Design Requirements For City Acceptance

(1) Executive Summary

A licensed engineer shall submit calculations and design drawings of the detention basin and sizing of storm drainage structures to the City at the time of submission of the development site plan. This design concept should be reviewed with Public Works Department, Engineering Division prior to formal submission of the design to the City. An executive summary is required that details how the storm water management plan meets the intent of the City Erosion Control and Storm Water Management Ordinance. The summary shall detail all assumptions, pre/post development discharge volumes, storage volume, AMC, function of discharge structure and emergency spillway, function of discharge structure and emergency spillway, function of any basin used as a sediment basin. A drawing may be necessary to show the basin drainage area.

(2) Detailed Drawings

The submission shall show detailed design drawings of the inlet/outlet structures, access roads, emergency spillway, paved ditches, headwalls, riprap, trash racks, anti-vortex structure, temporary/permanent vegetation, fences, gates, anti-seep collars, etc. A detailed cross section of the earthen berm shall be provided.

(3) Sediment Basin

Detail design drawings and construction notes are required for basins used as sediment basins during construction. The method of controlling/removing siltation and preventative maintenance procedures must be provided. All sediments shall be removed and the discharge structure cleaned after permanent vegetation has been established.

(4) Emergency Spillway

Each basin shall be capable of routing the 100-year storm flow through it without damage to the basin or its berm. An emergency spillway shall be provided, and it shall be capable of discharging the 100-year storm over-flow without damaging the basin berm.

(5) Spillway Construction

A spillway constructed over any basin berm shall be constructed of 3,000-psi concrete and shall traverse down the backside of the berm with appropriate energy dissipation at the tow of the spillway.

(6) Discharge Structure

Discharge structures shall be designed to minimize maintenance, clogging and vandalism. Rectangular weirs, hooded overflow risers and discharge structures with vertical slits are recommended to minimize maintenance. V-notched or triangular weirs are not desired.

(7) Orifice Plate

If a restrictor plate is necessary for proper sizing of the discharge orifice, it shall be a minimum of three-eights inch thick steel and the orifice diameter shall be machine cut smooth with square edges. The plate shall be mounted with three-eighths inch anchor bolts or welded. If welded, the weld shall be painted with a corrosion resistant paint.

(8) Basin Aesthetics

Detention basins shall be designed as aesthetically as possible and with design features that provide maximum safety of structures and surrounding grounds including adjacent downstream areas.

(9) Basin Swale

The bottom of the basin shall have a minimum four-foot wide concrete paved swale of 3,000 psi concrete that carries low volume flow from the inlet structures to the outlet structure. The minimum design of the swale shall carry a two-year storm event with a minimum one percent slope to maintain cleansing velocity. The minimum thickness of the concrete shall be four inches.

(10) Concrete Headwalls

Pre-cast or poured in place concrete headwalls are required at all outlet structures. Energy dissipater devices shall be constructed downstream of all headwalls. Minimum size of riprap energy dissipater pad shall be 1.5 times the diameter of the discharge pipe in width and three times the diameter of the discharge pipe in length.

(11) Soil Type and Compaction

Samples of the soil to be used for the basin berm shall be tested and its capabilities determined. The berm shall be designed to meet the minimum requirements for small earthen dams as specified by United States Department of the Interior, Bureau of Reclamation, Design of Small Dams, latest edition. An independent laboratory shall conduct soil sample and berm compaction testing during construction and reports shall be submitted to the City.

(12) Seeding Basin Slopes

Basin shall be seeded with a mix of Kentucky 31 Tall Fescue, Bluegrass and Rye. A viable vegetated growth shall be established before acceptance by the City.

(13) Basin Slopes

Basin side slopes shall be a minimum of 3:1 or flatter. A minimum 2:1 slope on the downstream portion of the basin berm is acceptable. The use of riprap as side slope stabilization is not acceptable. The basin floor shall have a minimum possible drainage slope of one percent from any point on the floor to the outlet pipe.

(14) Sodding

Areas around paved ditches, spillways, and head walls shall be sodded or covered with an erosion control blanket. The ground cover shall be placed five feet in width each side of paved ditches, 10 feet in width on each side of a spillway, and within a 10-foot radius of all headwalls. The City may waive the requirement for ground cover if vegetation has been established at the time of city acceptance.

(15) Trash Rack

A trash rack shall be placed on all outlet structures. The rack should be angled at no less than 45 degrees from vertical to minimize clogging, unless a riser pipe assembly is used. Bar spacing shall be a nominal four inches in both directions. The net open area of the rack shall be no less than four times the area of the outlet. The outlet structure should be directly accessible from the outer basin rim to allow cleaning of the trash rack during a storm.

(16) Basin Floor

The basin floor shall be reinforced with concrete mats or pavers when the floor is determined inadequate for city maintenance vehicles such as a turf tractor.

(17) Access Road

An all weather access road shall be installed from the nearest paved city street to the basin and outlet discharge structure. The road shall be designed with a maximum slope of 15 percent and a minimum width of 10 feet. If the access road exceeds three percent in grade, the minimum pavement thickness shall be six inches of compacted base stone and four inches of TDOT “E” mix asphalt. Six inches of base stone with no asphalt surface is permissible on roads of three percent and less. Requirements for roadway density shall comply with the SCRD. A flat area, which is a minimum of 12 feet in width, shall be constructed at the top of the basin berm.

(18) Landscaping

Landscaping of detention basin to screen from adjacent roadways shall comply with the City Zoning Ordinance Section 6-921(C). Landscape screening of adjacent residential areas should be provided.

(19) Basin Storage Volume

Detention basin storage volume shall be certified to the City by a licensed land surveyor after complete construction of the basin.

SECTION 9.00

"AS BUILT" DRAWING REQUIREMENTS

All entities that construct water lines, sewer lines, storm drainage and/or streets with associated appurtenances to be maintained by the City shall submit to the Public Works Department, Engineering Division a set of "As Built" construction drawings certified by a registered professional engineer or land surveyor licensed in the State of Tennessee as part of the City's acceptance process. NO REPRODUCTION OF PRELIMINARY PLATS SHALL BE ACCEPTED AS "AS BUILTS." "As Built" drawings shall also be submitted in electronic format using current city version of AutoCAD or DXF format. This file may be on 3.5-inch diskettes or CD-ROM. The City should be consulted for format to be used regarding layer names, line type and line color. The following applicable information shall be included on all "As Built" drawings.

9.01 STREETS

1. Horizontal and vertical survey control points used for construction layout
2. Horizontal alignment with radii, P.C.'s, and P.T.'s of all curves if significantly different from the Final Plat document
3. Vertical alignment with centerline grade if significantly different from the design profile
4. Dimensioned right-of-way and street widths
5. Typical cross section if significantly different from the design sections

9.02 STORM DRAINAGE

1. Pipe material and size.
2. Structure invert and top elevations
3. Pipe slope and distance
4. Tabulation of design flows to each drainage structure if significant design changes are made during construction
5. Details and elevations of permanent storm water impoundments and discharge structures and verification of design storage volume

9.03 WATER SYSTEM

1. Pipe sizes for mains and laterals
2. Location of mains by bearings and distances, coordinates, or by offset distances to permanent structures
3. Locations of valves, fire hydrants, meters, and blow-offs with distance references or Oak Ridge grid coordinate values
4. Location of all laterals reference by distance to a property corner

9.04 SANITARY SEWER SYSTEM

1. Location of manholes located by Oak Ridge grid coordinate values
2. Pipe sizes for mains and laterals
3. Pipe slopes and distances if significantly different from design

4. Manhole inverts and top elevations
5. Distance from manhole to manhole and distances from manholes to all service laterals
6. Length of laterals
7. Clean-out locations with distances referenced

SECTION 10.00

STANDARD DETAILS

You can view the Bookmarks with the Tab to the Left to Navigate to each Drawing (Click Bookmarks Tab)

STREETS

3.01 CIRCULAR AND HAMMER HEAD TURN –AROUND DIMENSIONS
3.02 CONCRETE DRIVEWAY WITH SIDEWALK AND GRASS STRIP
3.03 CONCRETE DRIVEWAY WITH SIDEWALK
3.04 MINERAL AGGREGATE BASE UNDER CURB & GUTTER
3.05 CURB & GUTTER DETAILS
3.06 STANDARD METHOD OF REMOVING EXISTING CURB & GUTTER
3.07 STANDARD CONCRETE MACHINE FORMED CURB
3.08 STANDARD CURB DRAIN
3.09 C.O.R. STANDARD CONCRETE CURB AND GUTTER
3.10 STANDARD CONCRETE SIDEWALK
3.11 TYPICAL HANDICAP RAMP “A”
3.12 TYPICAL HANDICAP RAMP “B”
3.13 TYPICAL HANDICAP RAMP “C”
3.14 TYPICAL RESIDENTIAL STREET SECTION
3.15 RELATIVE UTILITY PLACEMENT-RESIDENTIAL STREETS
3.16 STUB-OUT FOR FUTURE STREET
3.17 LOW-DENSITY DEVELOPMENT ROAD
3.18 MINIMUM TYPICAL STREET DESIGN STANDARDS
3.19 STANDARD CONCRETE SIDEWALK-ELECTRICAL DETAILS
3.20 RELATIVE UTILITY PLACEMENT-RESIDENTIAL STREETS-ELECTRICAL DETAILS
3.21 TYPICAL SERVICE CONNECTION LOCATIONS-ELECTRICAL DETAILS
3.22 TYPICAL ELECTRICAL EASEMENT WIDTHS

SOIL EROSION AND SEDIMENT CONTROL

4.01 STANDARD TEMPORARY SILT FENCE
4.02 TEMPORARY SEDIMENT/BASIN FILTER SCHEMATIC
4.03 GRAVEL AND RIPRAP SEDIMENT/FILTER BASIN
4.04 GRAVEL AND RIPRAP SEDIMENT/FILTER BERM BASIN
4.05 CATCH BASIN SEDIMENT FILTER
4.06 CHECK DAM
4.07 TEMPORARY CONSTRUCTION ENTRANCE
4.08 DIVERSION DITCH
4.09 RIPRAP LINE CHANNELS
4.10 INLET PROTECTION METHODS

PIPE TRENCHES

5.01 STANDARD TRENCH AND PAVEMENT REPAIR SECTION
5.02 PIPE ENCASEMENT DETAIL

WATER DISTRIBUTION

6.01 BACKFILLING & COMPACTION OF WATER LINES
6.02 STANDARD CAPPING AND BLOW-OFF ASSEMBLY DETAIL FOR FUTURE EXTENSION
6.03 STANDARD FIRE HYDRANT INSTALLATION
6.04 STANDARD 2” BLOW-OFF ASSEMBLY FOR PERMANENT DEAD END MAIN
6.05 AIR RELEASE VALVE
6.06 STANDARD VALVE BOX INSTALLATION
6.07 STANDARD REACTION BLOCKING-HORIZONTAL BEND
6.07A STANDARD REACTION BLOCKING-VERTICAL BEND
6.08 WATER LATERAL DETAILS
6.09 COMMERCIAL WATER LATERAL LAYOUT/METER VAULT
6.10 METER VAULT

SANITARY SEWERS

7.01 STANDARD CONCRETE ENCASEMENT FOR STEAM CROSSING
7.02 STANDARD HIGH VELOCITY MANHOLE INVERT & CONCRETE ANCHORING
7.03 STANDARD OUTSIDE DROP MANHOLE
7.04 STANDARD PRECAST CONCRETE MANHOLE
7.05 MANHOLE FRAME AND COVER
7.06 WATERTIGHT MANHOLE FRAME AND COVER
7.07 EXTERIOR CLEANOUT
7.08 STANDARD SANITARY SEWER TAP AND SERVICE
7.09 STANDARD AIR TEST TABLE
7.10 TYPICAL SUBMERSIBLE PUMP STATION
7.11 TYPICAL ABOVE GROUND PUMP STATION
7.12 NEW CONSTRUCTION PIPE BEDDING DETAILS

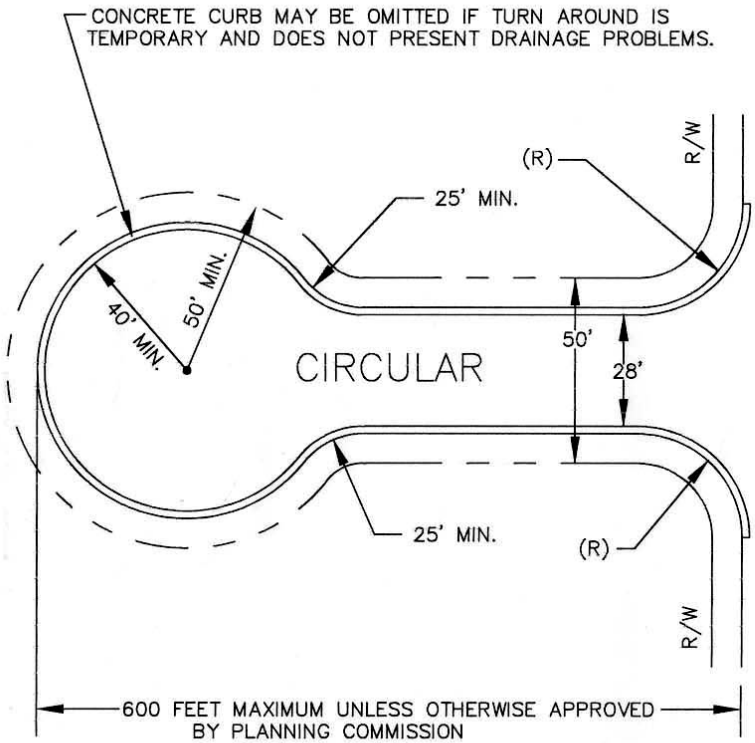

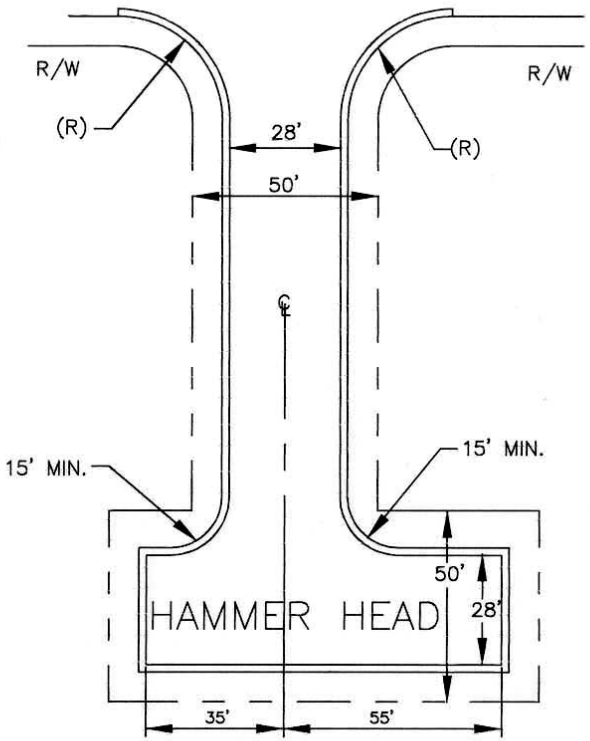

MINIMUM RADIUS (R) = 25' LOCAL INTERSECTION
30' COLLECTOR INTERSECTION
40' ARTERIAL INTERSECTION

NO.	DATE	DESCRIPTION	BY
1.	12/4/00	EFFECTIVE DATE	CCB

CIRCULAR & HAMMER HEAD TURN-AROUND DIMENSIONS

STANDARD DETAIL 3.01

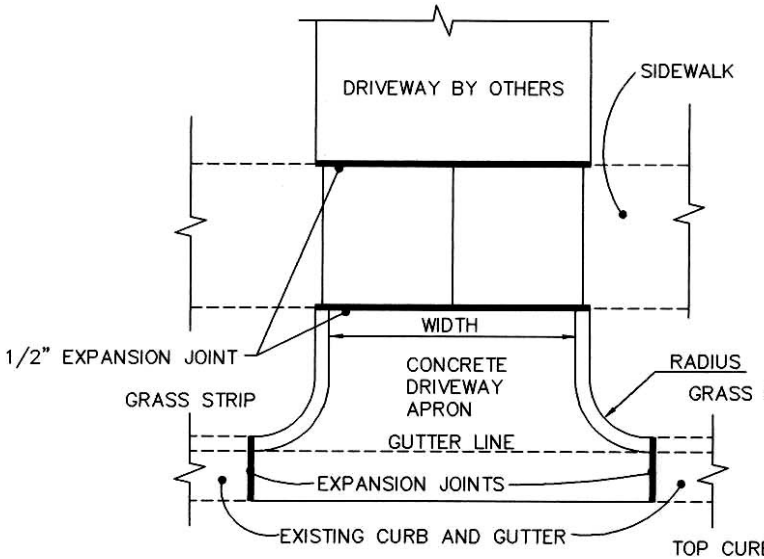

PLAN VIEW

N.T.S.

NOTE TO CONTRACTOR:

–DRIVEWAYS WIDTHS AND RADII MUST BE IN ACCORDANCE TO ZONING ORDINANCE.

–ALL CONCRETE SHALL BE MINIMUM 3000 P.S.I.

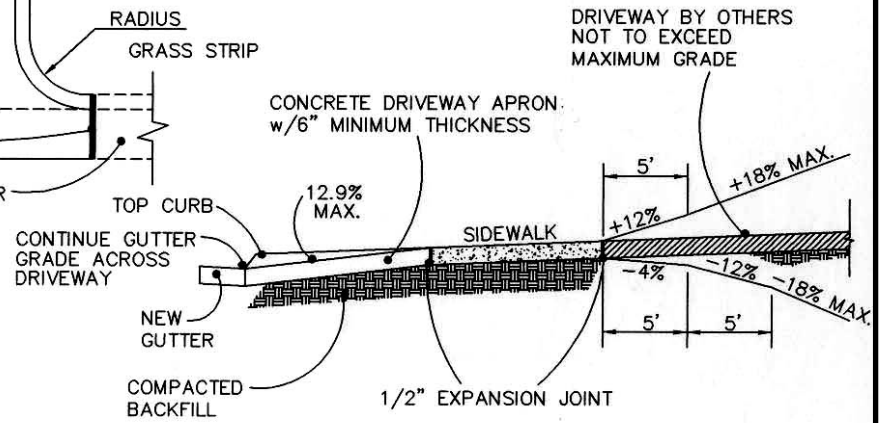

TYPICAL SECTION

N.T.S.

NOTE: 1. *CURB SHALL BE TAPERED TO FINISH FLUSH WITH SIDEWALK.*

2. *EXISTING SIDEWALK AT DRIVEWAY CROSSING SHALL BE REMOVED AND REPLACED IF LESS THAN 6 INCHES THICK.*

NO.	DATE	DESCRIPTION	BY
1.	12/4/00	EFFECTIVE DATE	CCB

CONCRETE DRIVEWAY WITH SIDEWALK AND GRASS STRIP

STANDARD DETAIL 3.02

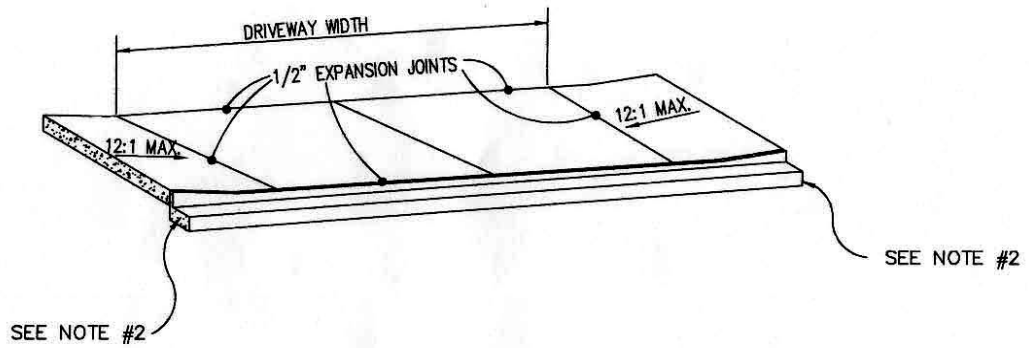

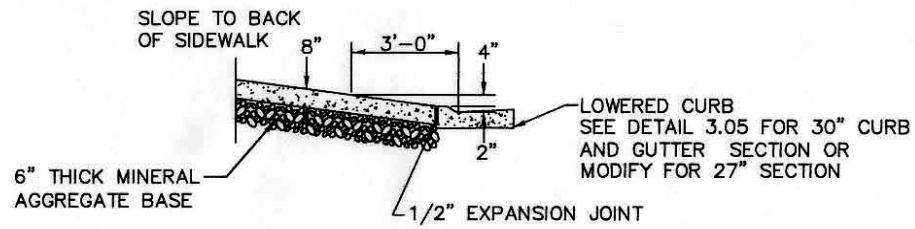

COMMERCIAL CONCRETE DRIVEWAY – ENTRANCE

NOTES:
1. DRIVEWAY WIDTHS AND RADII, MUST BE IN ACCORDANCE WITH THE ZONING ORDINANCE.
2. CURB AND GUTTER TO BE SAW-CUT FOR COMPLETE REMOVAL.

NO.	DATE	DESCRIPTION	BY
1.	12/4/00	EFFECTIVE DATE	CCB

CONCRETE DRIVEWAY WITH SIDEWALK

STANDARD DETAIL
3.03

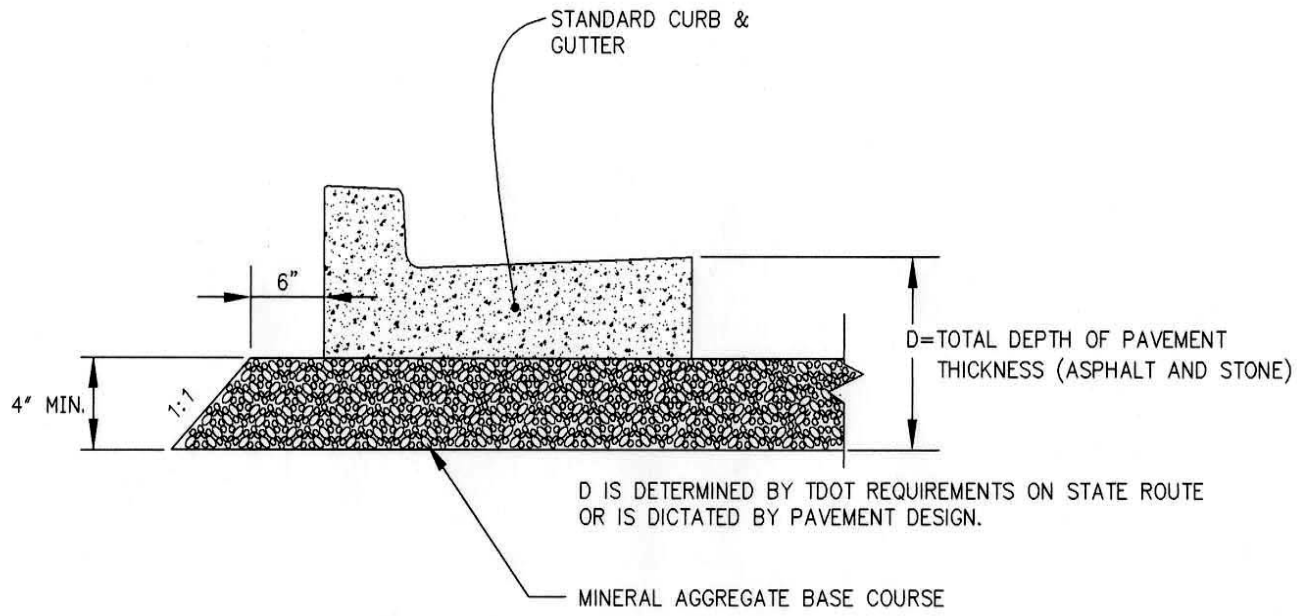

NO.	DATE	DESCRIPTION	BY
1.	12/4/00	EFFECTIVE DATE	CCB

MINERAL AGGREGATE BASE UNDER CURB & GUTTER

STANDARD DETAIL

3.04

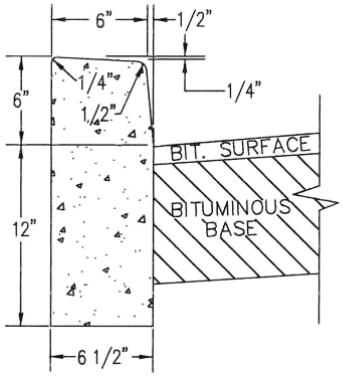

TYPE "A"

6" DETACHED CONCRETE CURB

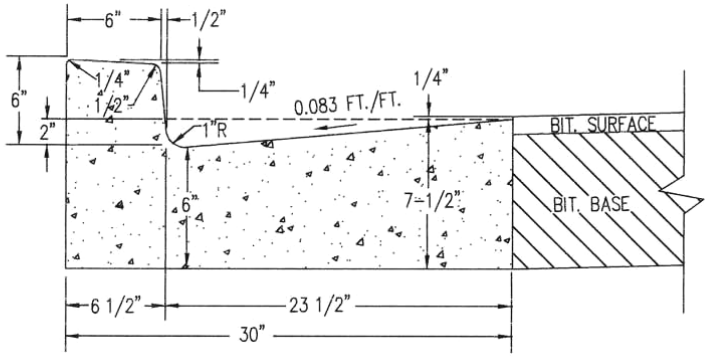

STANDARD 6" CONCRETE CURB & GUTTER

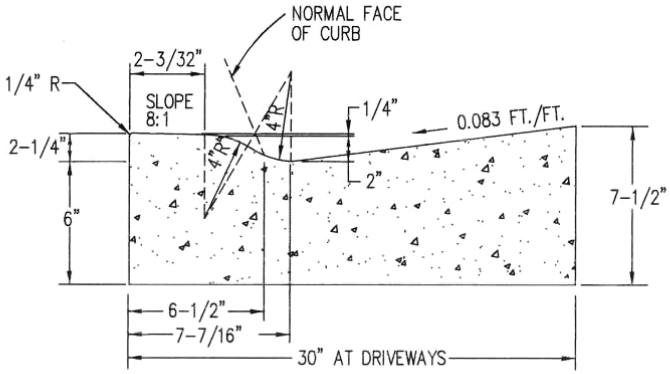

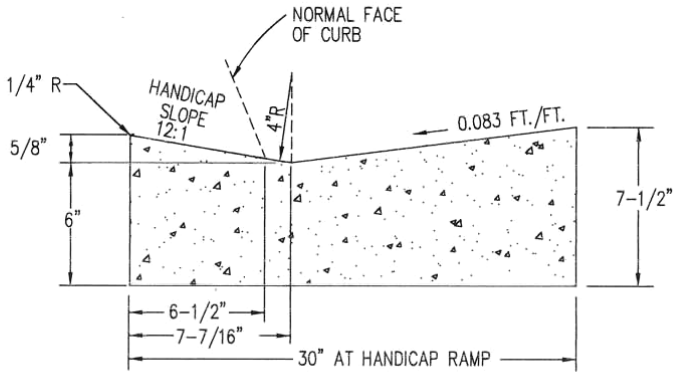

LOWERED CONCRETE CURBS

NO.	DATE	DESCRIPTION	BY
1.	12/4/00	EFFECTIVE DATE	CCB

CURB & GUTTER DETAILS

STANDARD DETAIL 3.05

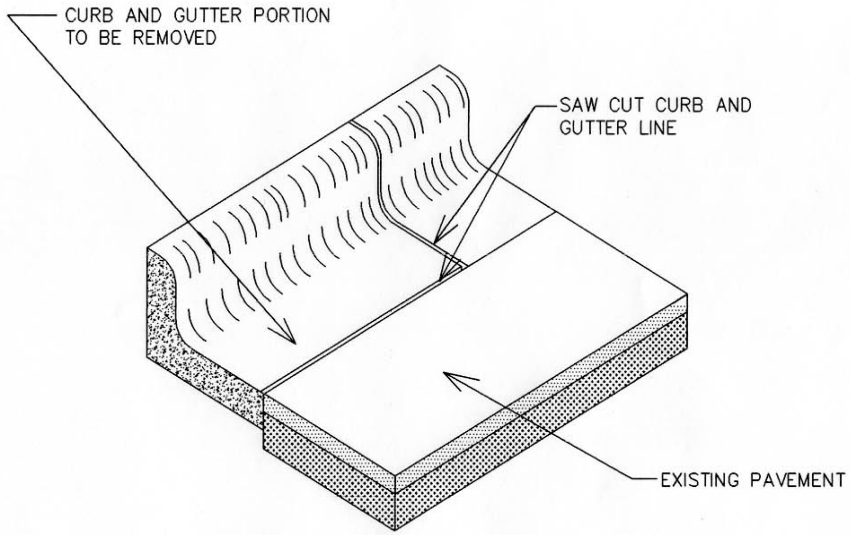

NOTE:
CURB AND GUTTER SECTION SHALL BE REMOVED IN ACCORDANCE WITH DRIVEWAY WIDTH APPROVED BY THE CITY.

DRIVEWAY APRON TO BE POURED MONOLITHICALLY TO CONNECT TO EXISTING PAVEMENT.

NO.	DATE	DESCRIPTION	BY
1.	12/4/00	EFFECTIVE DATE	CCB

STANDARD METHOD OF REMOVING EXISTING CURB & GUTTER

STANDARD DETAIL
3.06

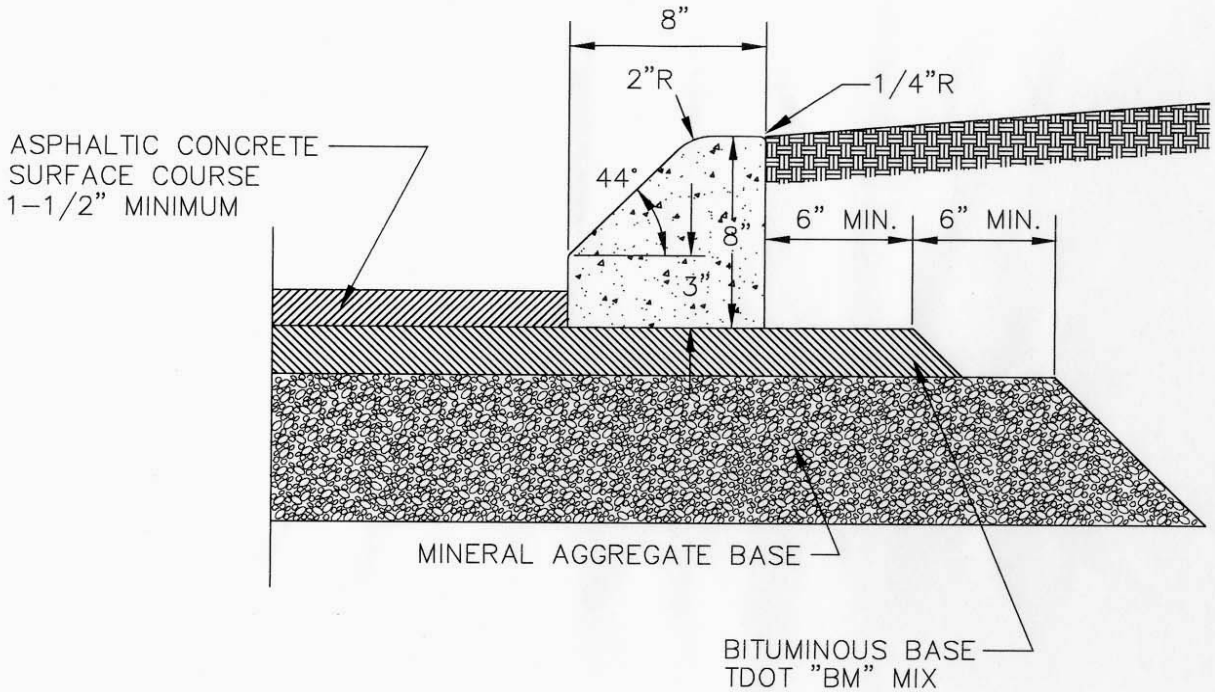

NOTE: THICKNESS OF MINERAL AGGREGATE BASE AND BITUMINOUS BASE LAYERS SHALL BE DETERMINED BY CBR SUBGRADE VALUES.

NO.	DATE	DESCRIPTION	BY
1.	12/4/00	EFFECTIVE DATE	CCB

STANDARD CONCRETE MACHINE FORMED CURB

STANDARD DETAIL 3.07

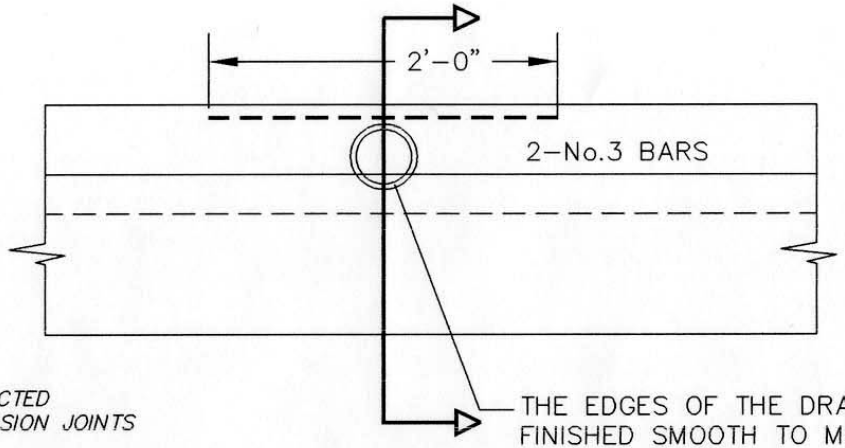

NOTES:

- *CURB DRAINS SHALL NOT BE CONSTRUCTED WITHIN 18" OF CONTRACTION OR EXPANSION JOINTS*
- *OPENING GRADE MAY VARY BETWEEN A MAXIMUM SLOPE OF 1/2" PER FT. AND A MINIMUM OF 1/4" PER FT.*
- *MORE THAN ONE HOLE MAY BE INSTALLED PROVIDED THE HOLES ARE LOCATED WITH 18" MINIMUM SPACING*

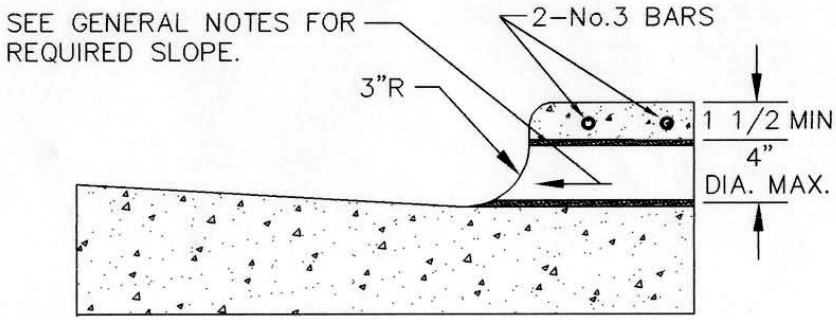

NO.	DATE	DESCRIPTION	BY
1.	12/4/00	EFFECTIVE DATE	CCB

STANDARD CURB DRAIN

STANDARD DETAIL 3.08

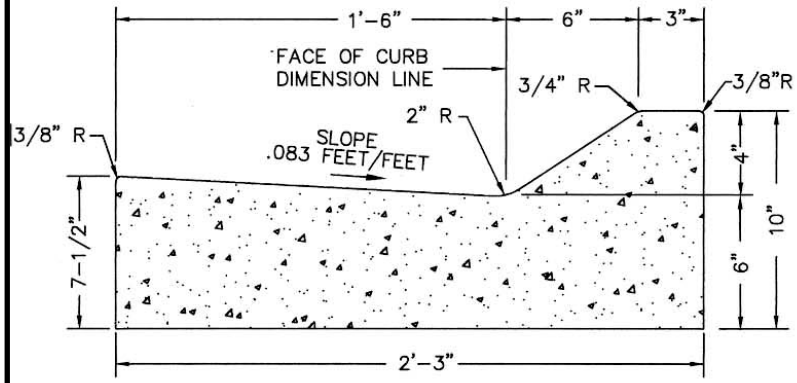

CURB AND GUTTER SECTION

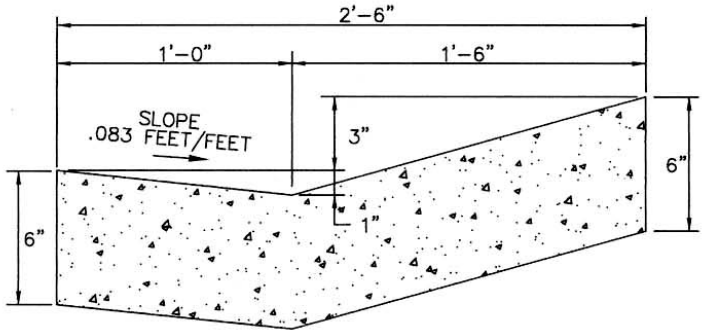

VALLEY GUTTER SECTION

FOR NEW RESIDENTIAL AREAS

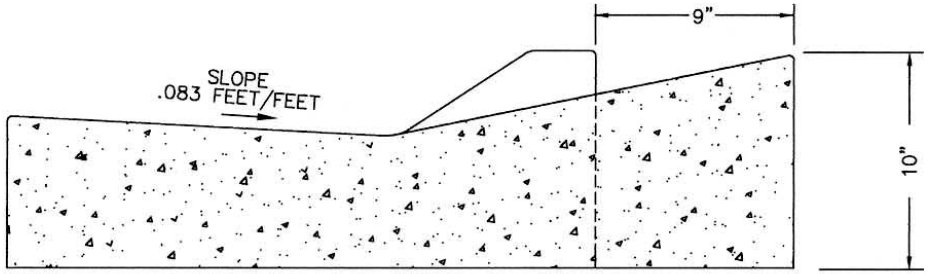

RESIDENTIAL LOWERED CONCRETE CURB

FOR EXISTING CITY CURB & GUTTER SECTIONS

NOTE: ALL DIMENSIONS ARE THE SAME AS STANDARD CURB AND GUTTER EXCEPT FOR EXTENDING THE BACK 9 INCHES AS SHOWN.

NO.	DATE	DESCRIPTION	BY
1.	12/4/00	EFFECTIVE DATE	CCB

C.O.R. STANDARD CONCRETE CURB AND GUTTER

STANDARD DETAIL 3.09

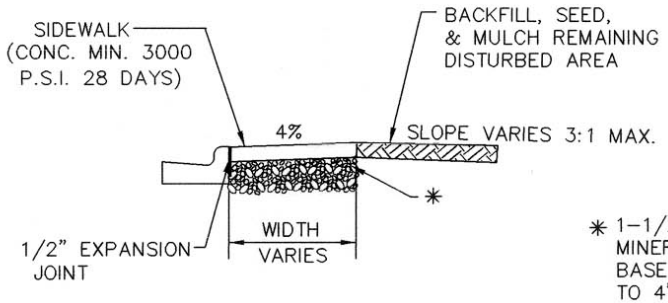

TYPICAL SECTION
WITHOUT GRASS STRIP

* 1-1/2" MAXIMUM SIZE MINERAL AGGREGATE BASE COMPACTED TO 4" DEPTH AT 95% STANDARD PROCTOR. INCREASE TO 6" DEPTH AT DRIVEWAYS.

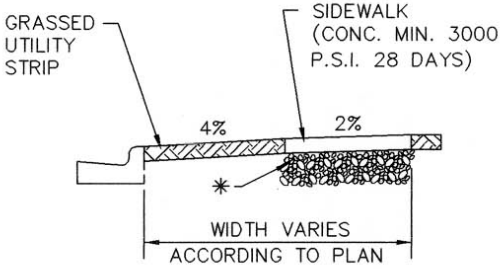

TYPICAL SECTION
WITH GRASS STRIP

NOTES:

1.) *TRANSVERSE EXPANSION JOINTS TO BE A MAXIMUM OF 40 FEET*
2.) *ALL FINISHED CONCRETE TO BE COATED WITH LIQUID MEMBRANE-FORMING CURING COMPOUND, ASTM C-309*
3) *ALL CONSTRUCTION TO MEET TENNESSEE DEPARTMENT OF TRANSPORTATION STANDARD SPECIFICATIONS FOR ROAD AND BRIDGES CONSTRUCTION, LATEST EDITION.*
4) *WHEN ELECTRIC EQUIPMENT IS TO BE INSTALLED WITHIN THE SIDEWALK, THE DEVELOPER SHALL INSURE PROPER INTERFACE BETWEEN THE CONCRETE SIDEWALK AND THIS EQUIPMENT(e.g. MANHOLES, SERVICE PEDESTALS, ETC.) SEE ELECTRICAL STANDARD DETAIL 3.19.*

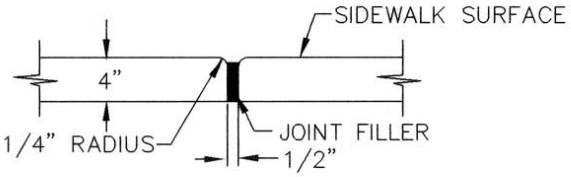

TRANSVERSE EXPANSION JOINT

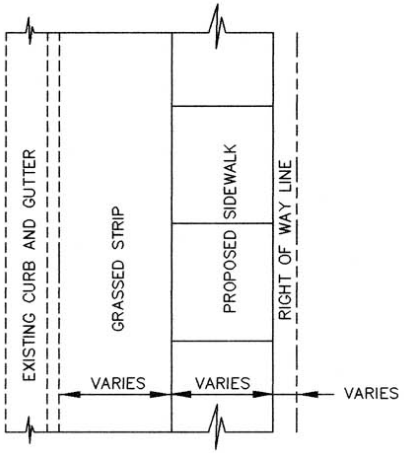

PLAN VIEW

NO.	DATE	DESCRIPTION	BY
1.	12/4/00	EFFECTIVE DATE	CCB

STANDARD CONCRETE SIDEWALK

STANDARD DETAIL
3.10

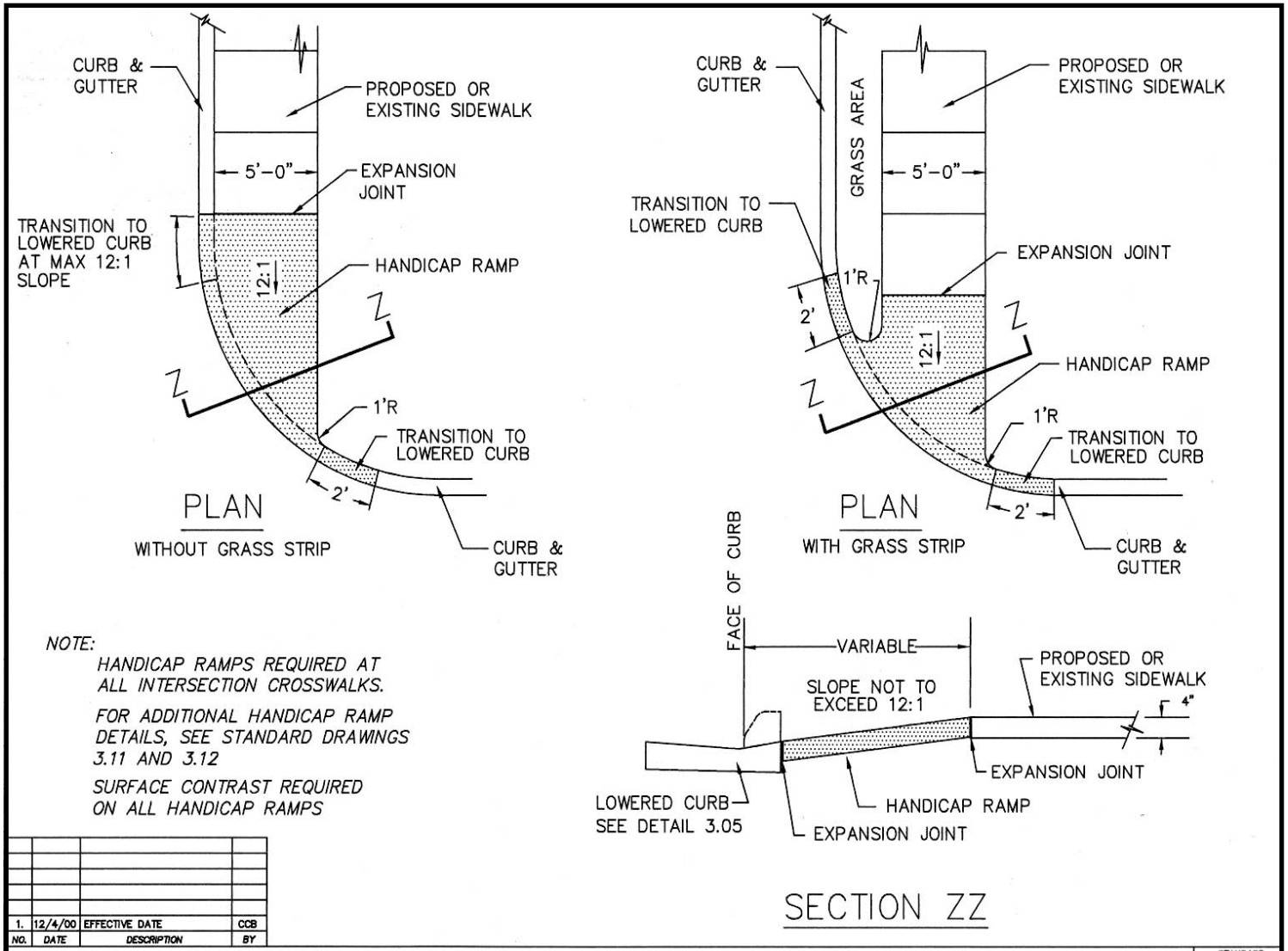

NOTE:

HANDICAP RAMPS REQUIRED AT ALL INTERSECTION CROSSWALKS.

FOR ADDITIONAL HANDICAP RAMP DETAILS, SEE STANDARD DRAWINGS 3.11 AND 3.12

SURFACE CONTRAST REQUIRED ON ALL HANDICAP RAMPS

NO.	DATE	DESCRIPTION	BY
1.	12/4/00	EFFECTIVE DATE	CCB

TYPICAL HANDICAP RAMP "A"

STANDARD DETAIL 3.11

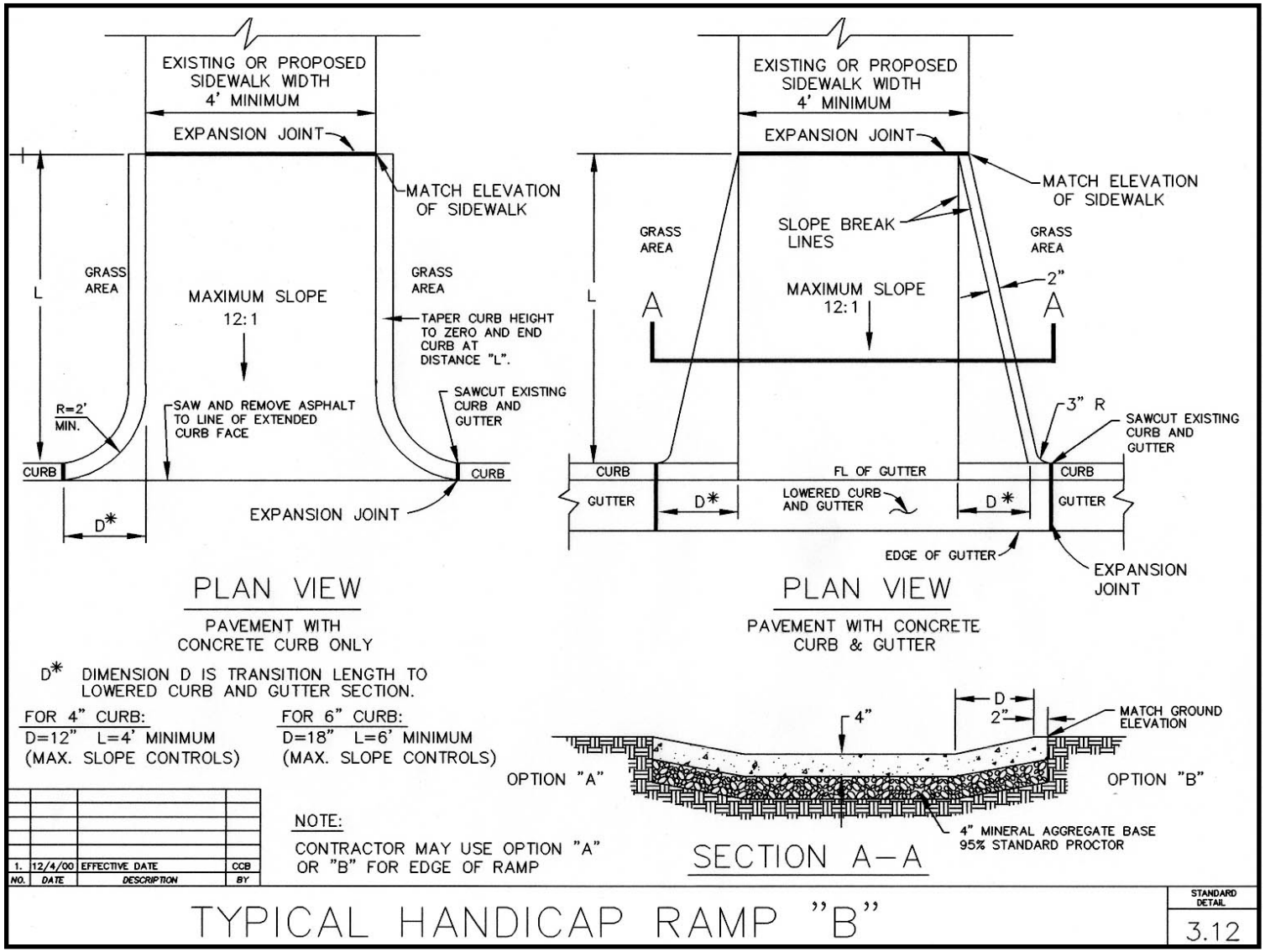

D* DIMENSION D IS TRANSITION LENGTH TO LOWERED CURB AND GUTTER SECTION.

FOR 4" CURB:
D=12" L=4' MINIMUM
(MAX. SLOPE CONTROLS)

FOR 6" CURB:
D=18" L=6' MINIMUM
(MAX. SLOPE CONTROLS)

NOTE:
CONTRACTOR MAY USE OPTION "A" OR "B" FOR EDGE OF RAMP

NO.	DATE	DESCRIPTION	BY
1.	12/4/00	EFFECTIVE DATE	CCB

TYPICAL HANDICAP RAMP "B"

STANDARD DETAIL 3.12

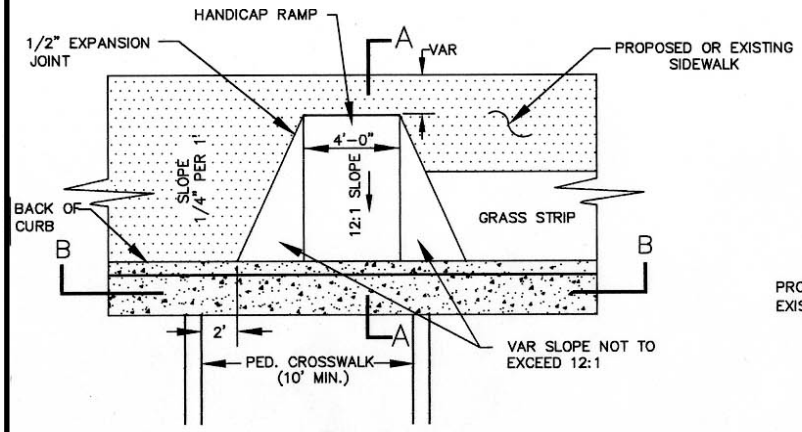

PLAN

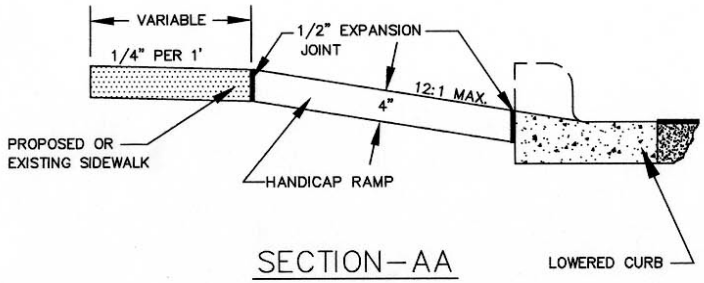

SECTION–AA

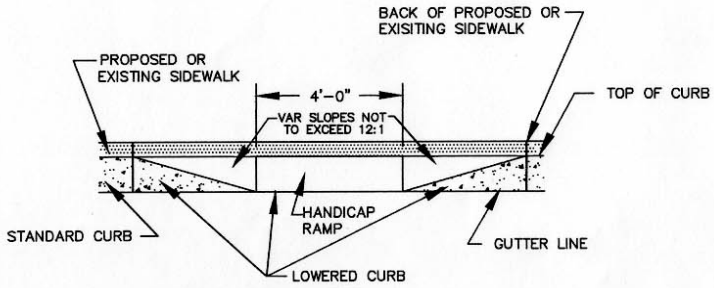

SECTION–BB

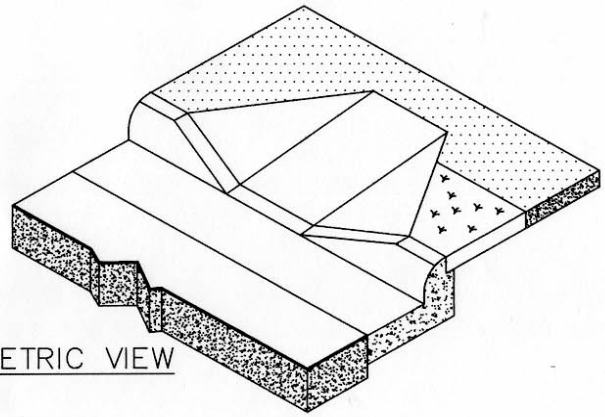

ISOMETRIC VIEW

NO.	DATE	DESCRIPTION	BY
1.	12/4/00	EFFECTIVE DATE	CCB

TYPICAL HANDICAP RAMP "C"

STANDARD DETAIL

3.13

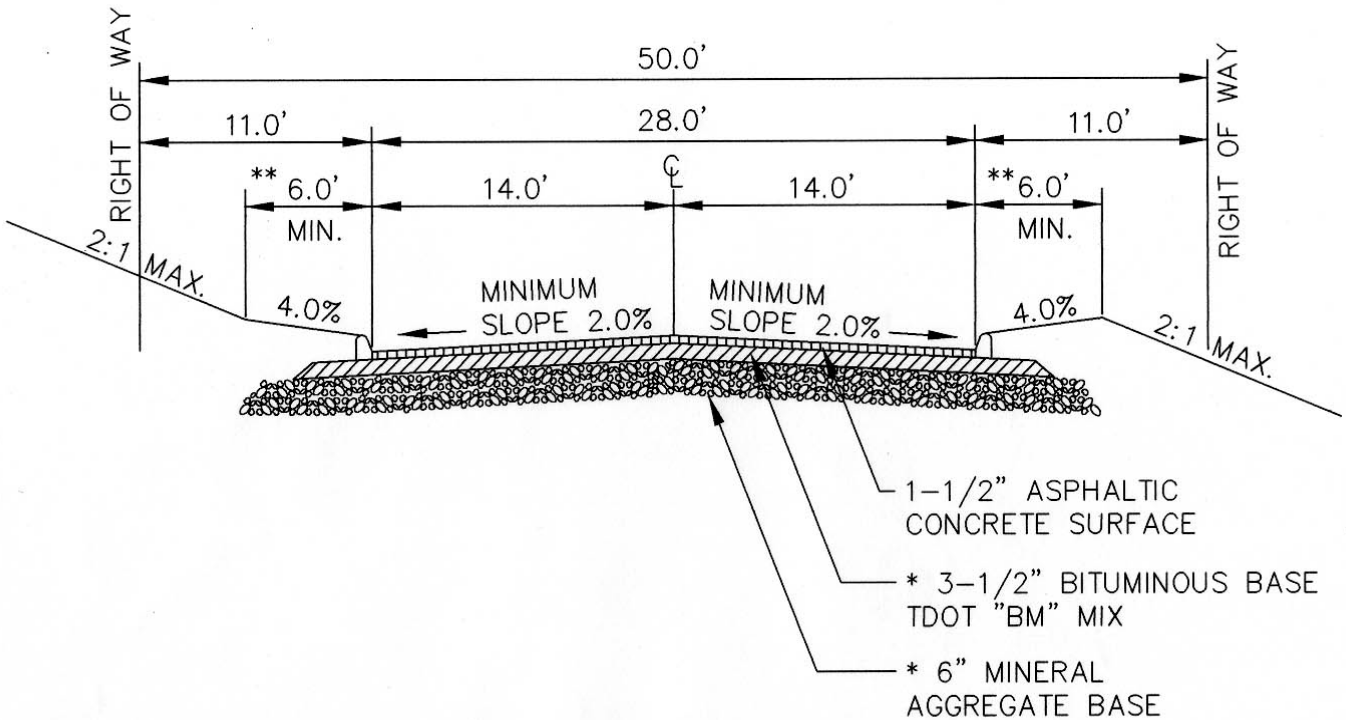

** SUBDIVISION REGULATIONS ARTICLE IV, GENERAL DESIGN STANDARDS, SECTION E7f ON SIDEWALK LOCATIONS, SHOULD BE CONSULTED FOR SIDEWALK REQUIREMENTS WHICH WILL CHANGE THIS ROADSIDE TYPICAL SECTION. WHEN CURBSIDE LOCATIONS FOR ELECTRIC EQUIPMENT IS NOT POSSIBLE, THE DEVELOPER SHALL ADJUST THE MINIMUM UTILITY STRIP DIMENSION TO ELECTRIC DEPARTMENT REQUIREMENTS.

NO.	DATE	DESCRIPTION	BY
1.	12/4/00	EFFECTIVE DATE	CCB

* NOTE:

THICKNESS OF MINERAL AGGREGATE BASE AND BITUMINOUS BASE LAYERS SHALL BE DETERMINED BY CBR SUBGRADE VALUES.

TYPICAL RESIDENTIAL STREET SECTION

STANDARD DETAIL 3.14

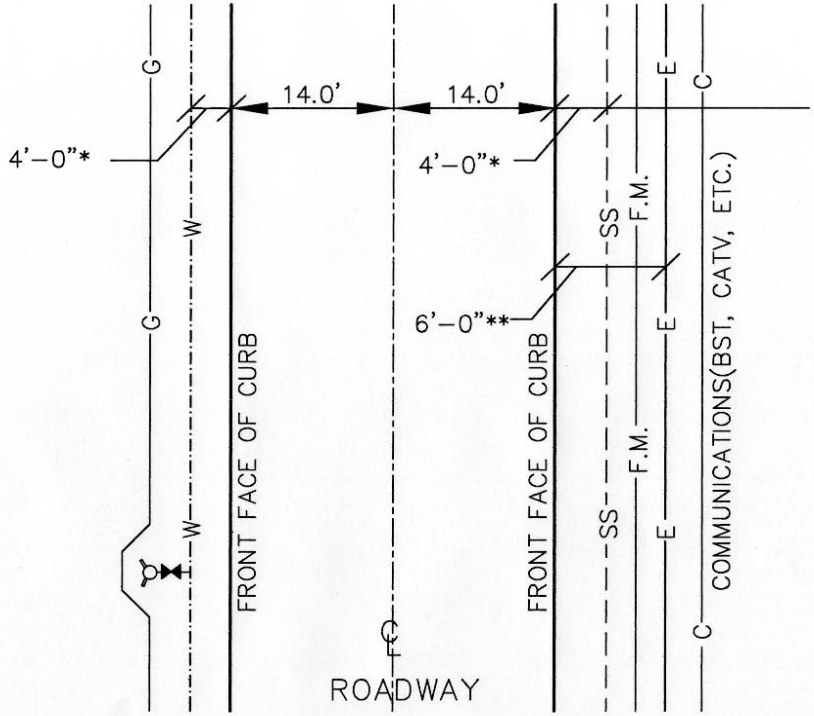

NOTE: * MINIMUM DESIRABLE DIMENSION TO WATER, SANITARY SEWER OR OTHER UTILITY NEAREST CURB.

UTILITY PLACEMENT AT NON–RESIDENTIAL SITES SHALL BE BASED ON INDIVIDUAL SITE PARAMETERS.

** WHEN REQUIRED CLEARANCES TO ADJACENT UTILITIES CAN NOT BE MET, THE DEVELOPER SHALL CONTACT THE CITY OF OAK RIDGE ELECTRIC DEPARTMENT. (SEE ELECTRICAL STANDARD DETAIL 3.20)

NO.	DATE	DESCRIPTION	BY
1.	12/4/00	EFFECTIVE DATE	CCB

RELATIVE UTILITY PLACEMENT–RESIDENTIAL STREETS

STANDARD DETAIL 3.15

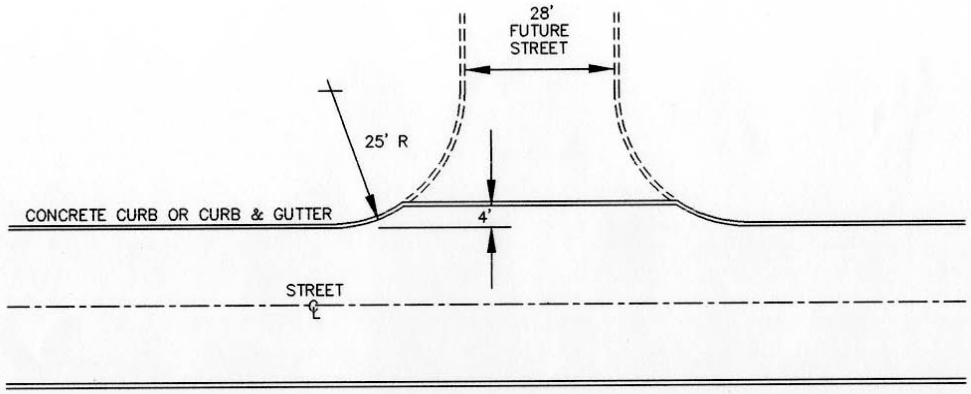

PLAN VIEW

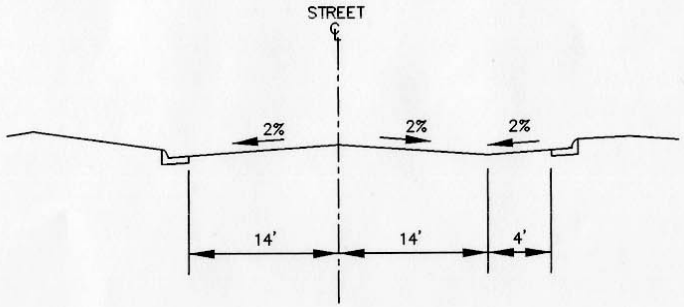

CROSS SECTION

NO.	DATE	DESCRIPTION	BY
1.	12/4/00	EFFECTIVE DATE	CCB

STUB-OUT FOR FUTURE STREET

STANDARD DETAIL

3.16

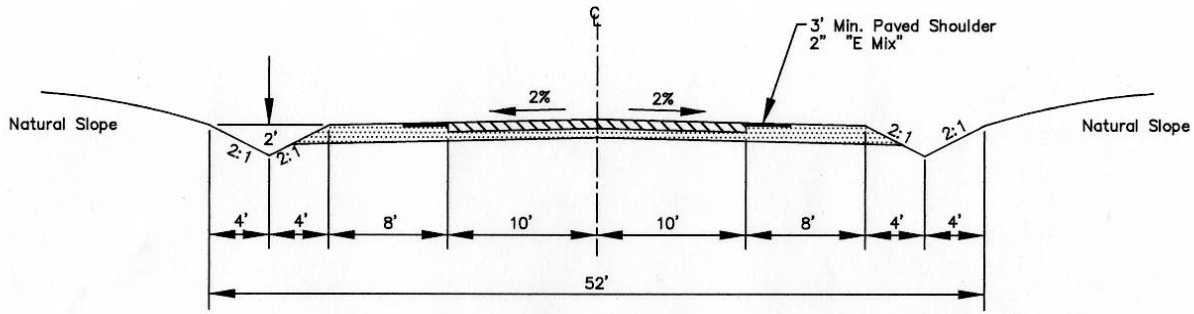

NOTES

1) Minimum ditch line standard shown. Actual depth may be greater based on design storm runoff capcity.

2) Shoulder pavement may be omitted with 22' Roadway width.

3) Single solid white line four inches in width shall be painted on roadway edge.

4) The developer shall install curbed utility islands for the installation of electric facilities as required by the Electric Department.

5) When curbside locations for electric equipment is not possible, the developer shall adjust the minimum utility strip dimension to Electric Department requirements.

NO.	DATE	DESCRIPTION	BY
1.	12/4/00	EFFECTIVE DATE	CCB

LOW-DENSITY DEVELOPMENT ROAD

STANDARD DETAIL 3.17

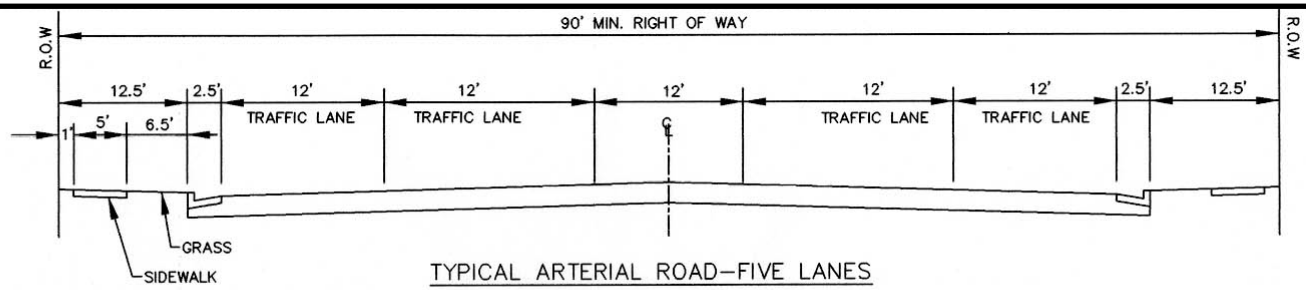

TYPICAL ARTERIAL ROAD–FIVE LANES

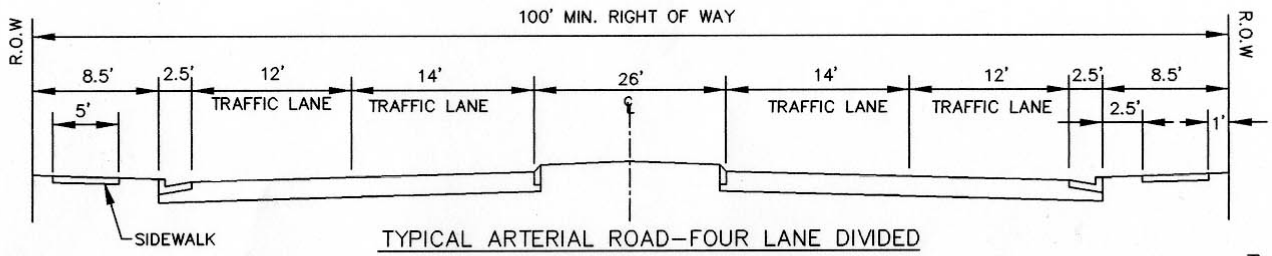

TYPICAL ARTERIAL ROAD–FOUR LANE DIVIDED

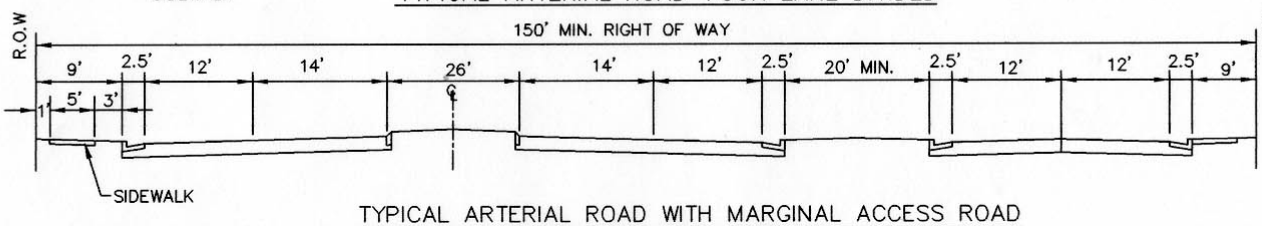

TYPICAL ARTERIAL ROAD WITH MARGINAL ACCESS ROAD

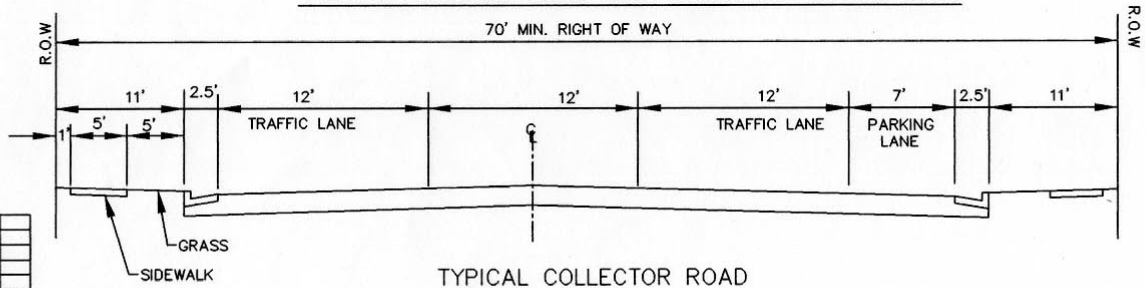

TYPICAL COLLECTOR ROAD

NO.	DATE	DESCRIPTION	BY
1.	12/4/00	EFFECTIVE DATE	CCB

MINIMUM TYPICAL STREET DESIGN STANDARDS

STANDARD DETAIL
3.18

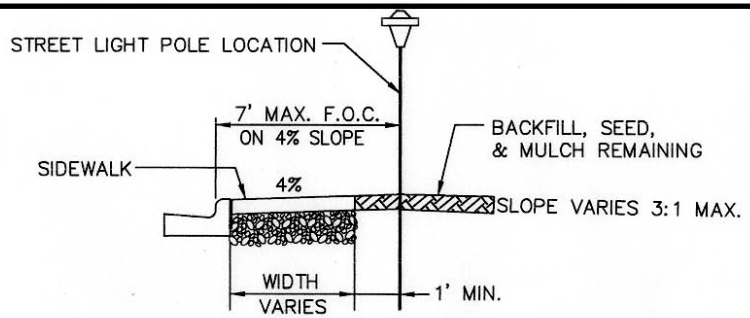

TYPICAL SECTION
WITHOUT GRASS STRIP

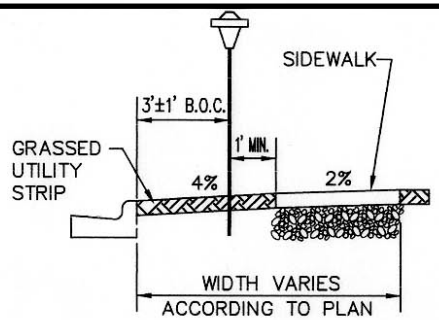

TYPICAL SECTION
WITH GRASS STRIP

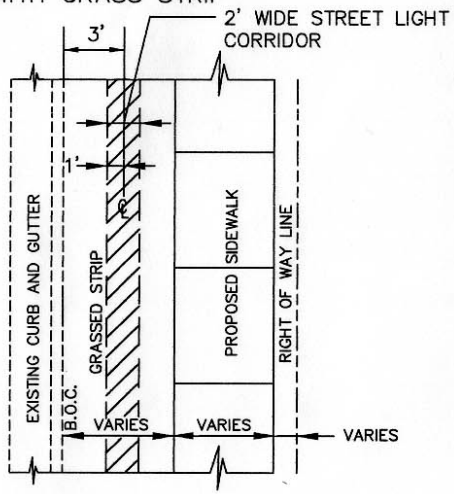

PLAN VIEW

NOTES:

1) B.O.C. = BACK OF CURB
2) F.O.C. = FRONT OF CURB
3) WHEN ELECTRIC EQUIPMENT IS TO BE INSTALLED WITHIN THE THE SIDEWALK, THE DEVELOPER SHALL INSURE PROPER INTERFACE BETWEEN THE CONCRETE SIDEWALK AND THIS EQUIPMENT (E.G. MANHOLES, SERVICE PEDESTALS, ETC.)

NO.	DATE	DESCRIPTION	BY
1.	12/4/00	EFFECTIVE DATE	CCB

STANDARD CONCRETE SIDEWALK–ELECTRICAL DETAILS

STANDARD DETAIL
3.19

LEGEND

FOC = FRONT OF CURB

BOC = BACK OF CURB

G — NATURAL GAS LINE

SL — STREET LIGHT CORRIDOR

W — WATER LINE

SS — SANITARY SEWER LINE

FM — FORCE MAIN

E — ELECTRIC LINE

C — COMMUNICATION LINE (BST, CATV, ETC.)

FIRE HYDRANT

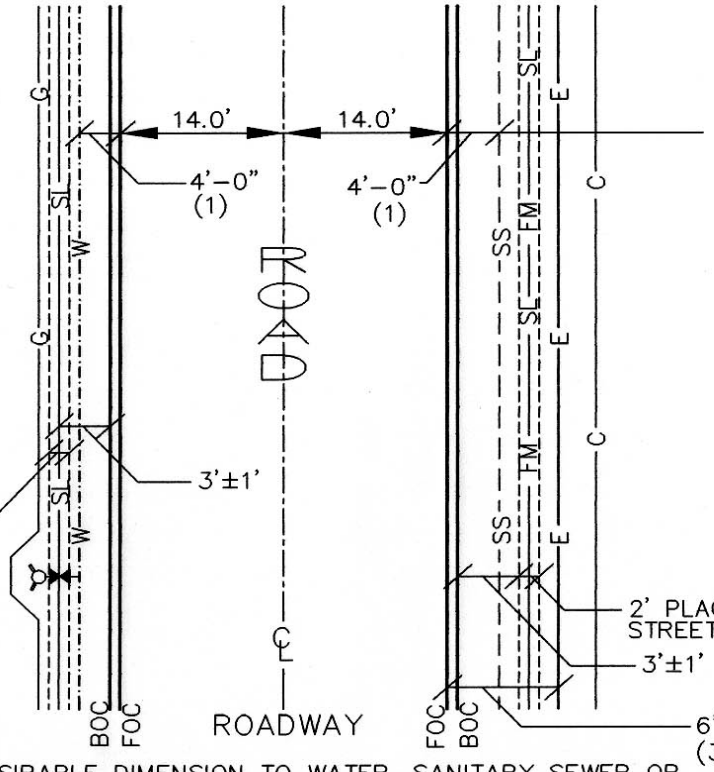

NOTES:

1) MINIMUM DESIRABLE DIMENSION TO WATER, SANITARY SEWER OR OTHER UTILITY NEAREST CURB.
2) UTILITY PLACEMENT AT NON-RESIDENTIAL SITES SHALL BE BASED ON INDIVIDUAL SITE PARAMETERS.
3) MAXIMUM DIMENSION FROM FRONT OF CURB
4) WHEN REQUIRED CLEARANCES TO ADJACENT UTILITES CANNOT BE MET, THE DEVELOPER SHALL CONTACT THE CITY OF OAK RIDGE ELECTRIC DEPARTMENT.

NO.	DATE	DESCRIPTION	BY
1.	12/4/00	EFFECTIVE DATE	CCB

RELATIVE UTILITY PLACEMENT-RESIDENTIAL STREETS-ELECTRICAL DETAILS

STANDARD DETAIL 3.20

LEGEND

(1)	LOT DESIGNATION
R.O.W.	RIGHT-OF-WAY LOCATION
— E —	ELECTRIC LINE
— W —	WATER LINE
△	ELECTRIC TRANSFORMER
○	ELECTRIC SERVICE PEDESTAL
⟍	ELECTRIC SERVICE LINE TO LOT
•	WATER METER FOR SERVICE LINE TO LOT

NOTE

1.) TYPICAL ELECTRIC AND WATER SERVICE PROVISIONS SHOULD BE LOCATED ON OPPOSING CORNERS OF INDIVIDUAL LOT LINE LOCATIONS.

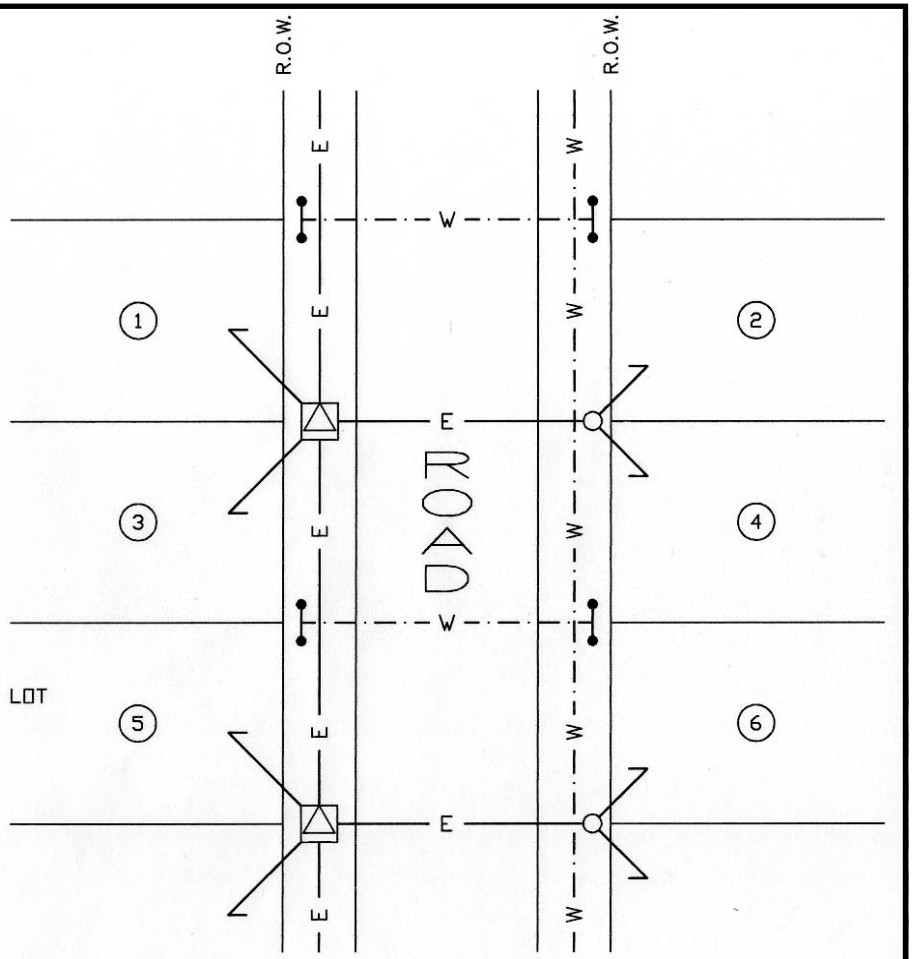

PLAN VIEW

NO.	DATE	DESCRIPTION	BY
1.	12/4/00	EFFECTIVE DATE	CCB

TYPICAL SERVICE CONNECTION LOCATIONS—ELECTRICAL DETAILS

STANDARD DETAIL 3.21

UNDERGROUND

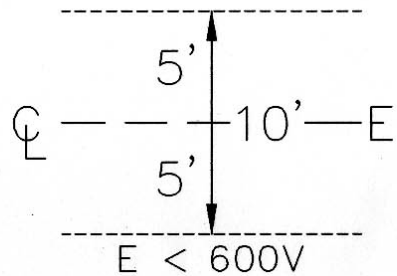

E < 600V

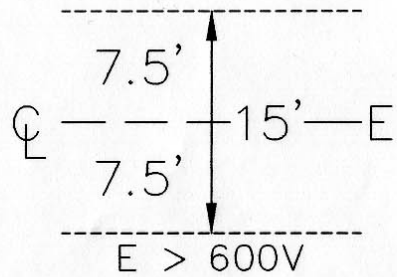

E > 600V

OVERHEAD

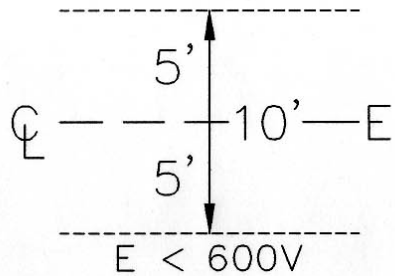

E < 600V

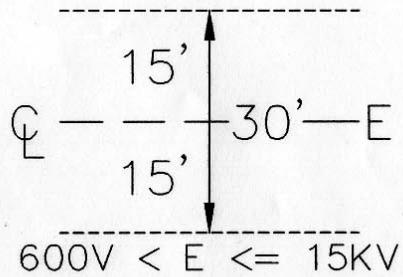

600V < E <= 15KV

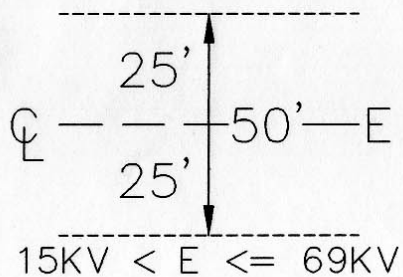

15KV < E <= 69KV

NO.	DATE	DESCRIPTION	BY
1.	12/4/00	EFFECTIVE DATE	CCB

TYPICAL ELECTRICAL EASEMENT WIDTHS

STANDARD DETAIL 3.22

NOTE:

-USE SILT FENCE ONLY WHEN DRAINAGE AREA DOES NOT EXCEED 1/4 ACRE PER 100 FEET OF FENCE AND NEVER IN AREAS OF CONCENTRATED FLOW GREATER THAN ONE CUBIC FEET PER SECOND

-SILT FENCE/STRAW BALE CHECK DAM PLACEMENT SUGGESTED AT MINOR SWALES

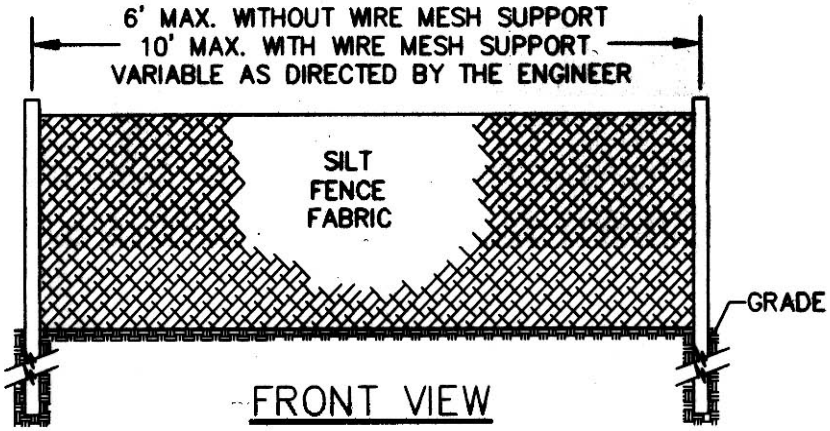

FRONT VIEW

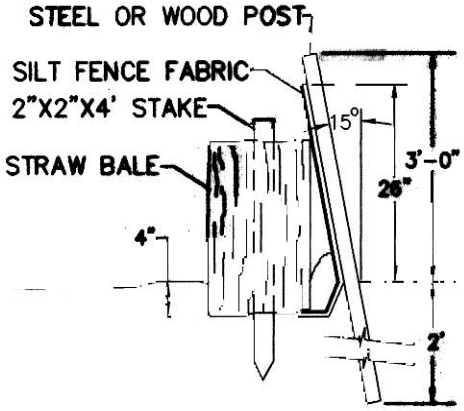

SILT FENCE/STRAW BALE CHECK DAM

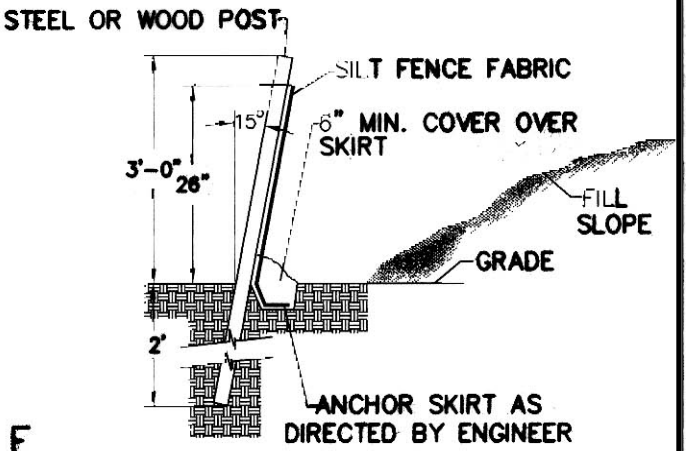

SIDE VIEW

NO.	DATE	DESCRIPTION	BY
1.	12/4/00	EFFECTIVE DATE	CCB

STANDARD TEMPORARY SILT FENCE

STANDARD DETAIL 4.01

NOTES:

1) TRASH RACK AND ANTI-VORTEX DEVICE OPTIONAL

2) TOP WIDTH
MIN. 8' FOR DAM LESS THAN 10' HEIGHT
MIN. 10' FOR DAM GREATER THAN 10' HEIGHT
TO 20' MAX HEIGHT

3) SHAPE FACTOR APPROX. 2:1 LENGTH/WIDTH

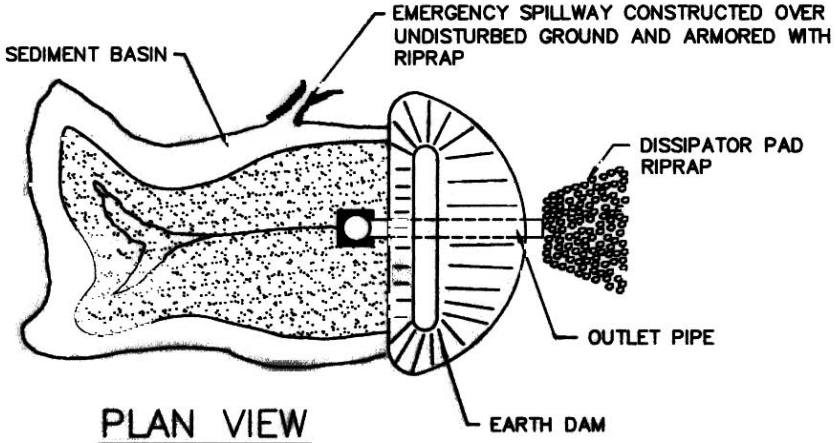

PLAN VIEW

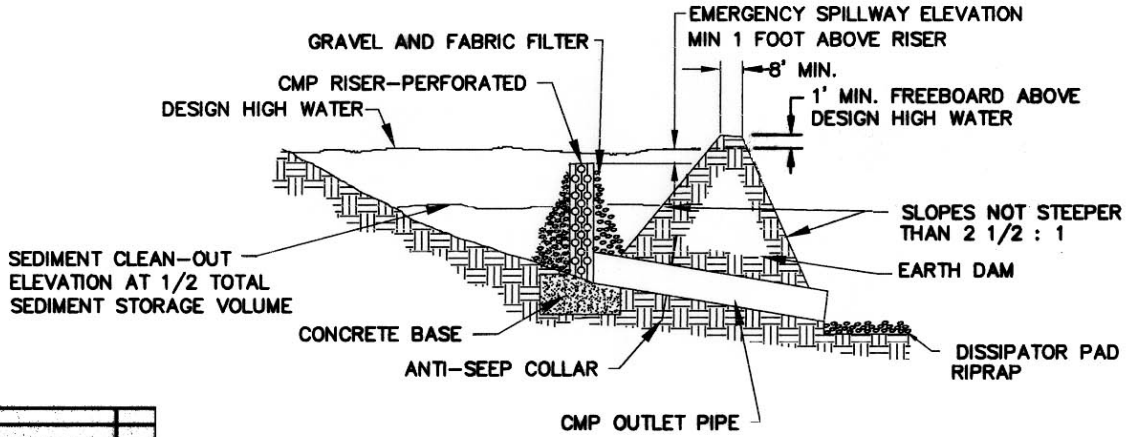

CROSS SECTION

NO.	DATE	DESCRIPTION	BY
1.	12/4/00	EFFECTIVE DATE	CCB

TEMPORARY SEDIMENT/FILTER BASIN SCHEMATIC

STANDARD DETAIL 4.02

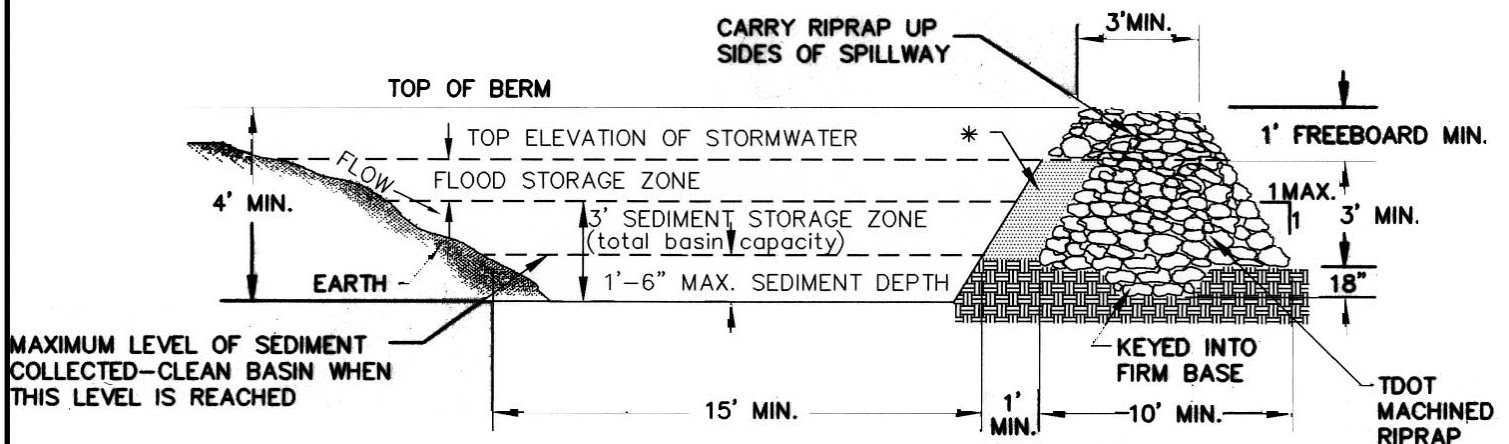

SECTION THRU BASIN & FILTER

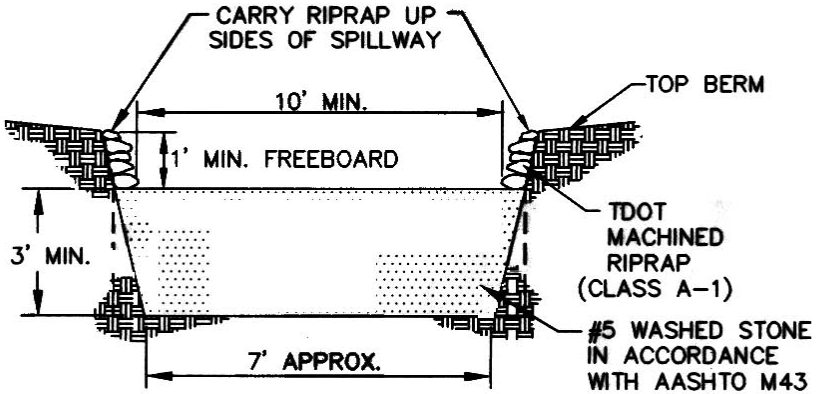

SECTION THRU BERM AT FILTER

* #5 WASHED STONE IN ACCORDANCE WITH AASHTO M43

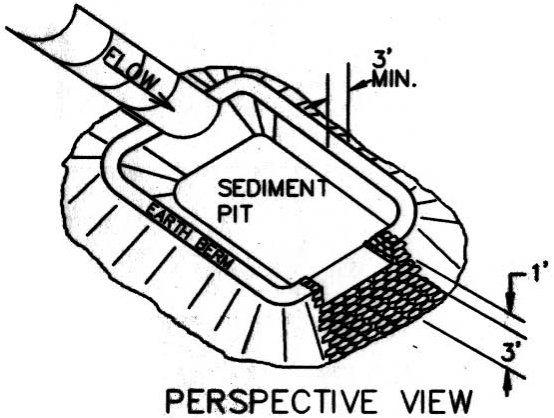

PERSPECTIVE VIEW

NO.	DATE	DESCRIPTION	BY
1.	12/4/00	EFFECTIVE DATE	CCB

NOTE:
USE FOR DRAINAGE AREAS NOT EXCEEDING 5 (five) ACRES.
RIPRAP AT THE DAM SHALL BE KEYED INTO THE DAM.

GRAVEL AND RIPRAP SEDIMENT/FILTER BASIN

STANDARD DETAIL 4.03

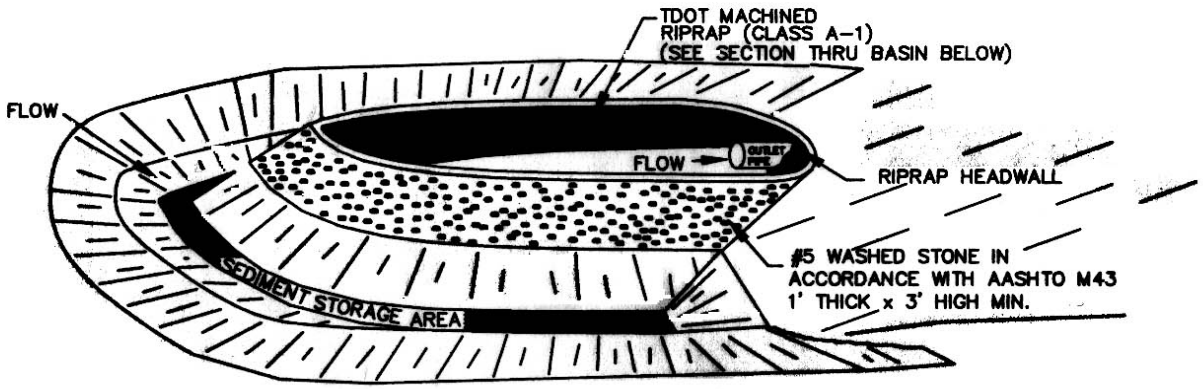

PERSPECTIVE VIEW

NO SCALE

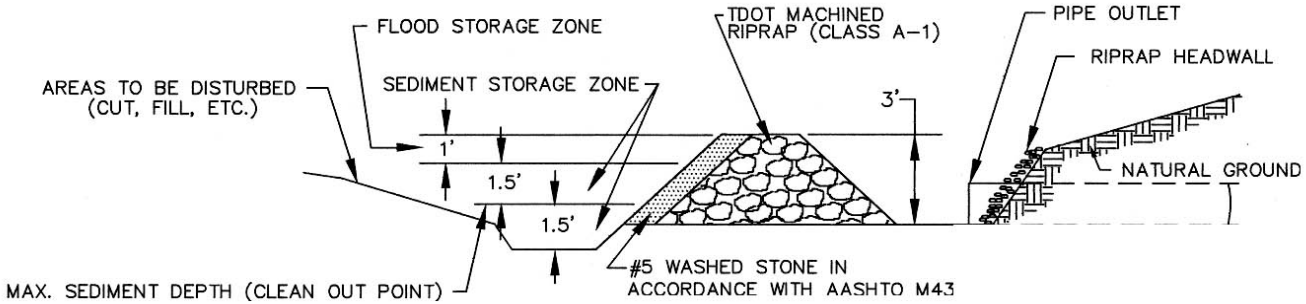

SECTION THRU BASIN, FILTER AND CULVERT PIPE

NO SCALE

NO.	DATE	DESCRIPTION	BY
1.	12/4/00	EFFECTIVE DATE	CCB

NOTE: GRAVEL AND RIPRAP FILTER BERM BASIN DETAIL IS DESIGNED TO PROTECT EXISTING PIPE INVERTS THAT DRAIN 5 ACRES OR LESS.
DIMENSIONS ARE MINIMUM ACCEPTABLE UNLESS OTHERWISE NOTED.
SEDIMENT STORAGE VOLUME IS 1800 CUBIC FEET PER ACRE.

GRAVEL AND RIPRAP SEDIMENT/FILTER BERM BASIN

STANDARD DETAIL
4.04

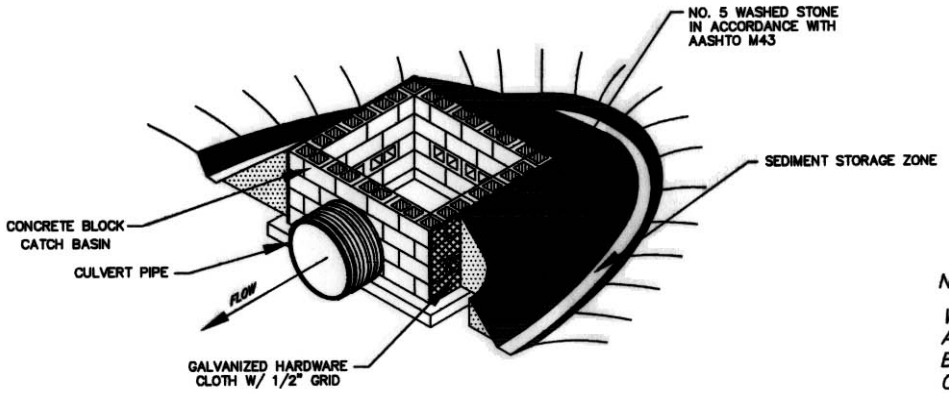

PERSPECTIVE VIEW

NOTE:

WHEN DRAINAGE AREA IS STABILIZED OR AT END OF PROJECT, CATCH BASIN CAN BE RAISED AS NEEDED PLUGGING OPEN COURSE OF BLOCK WITH MORTAR.

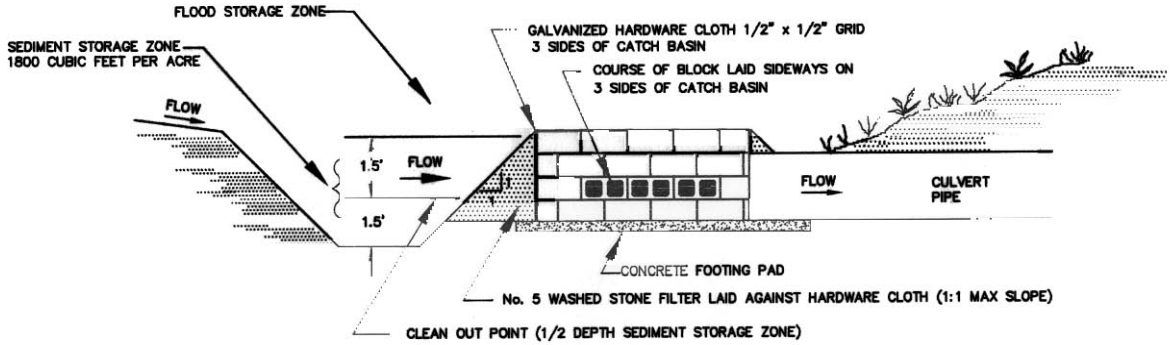

SECTION VIEW

NO.	DATE	DESCRIPTION	BY
1.	12/4/00	EFFECTIVE DATE	CCB

CATCH BASIN SEDIMENT FILTER

STANDARD DETAIL

4.05

NOTE:

1) REFER TO STANDARD DRAWING 4.01 FOR SILT FENCE/STRAW BALE CHECK DAM.

PROFILE VIEW

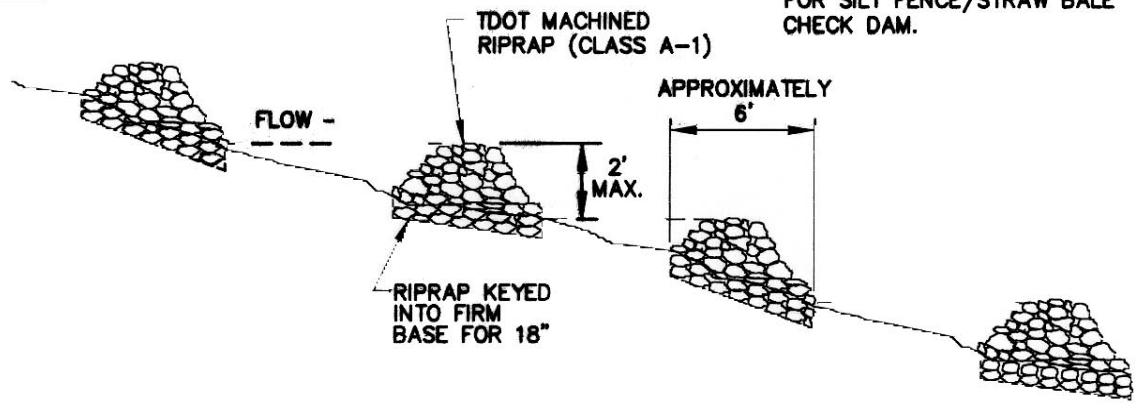

SECTION VIEW

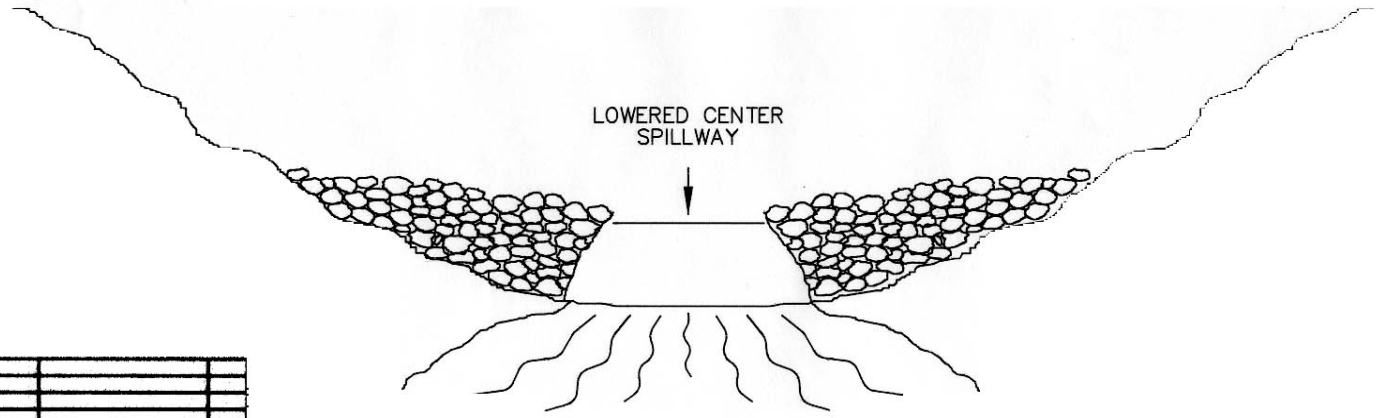

NO.	DATE	DESCRIPTION	BY
1.	12/4/00	EFFECTIVE DATE	CCB

CHECK DAM

STANDARD DETAIL

4.06

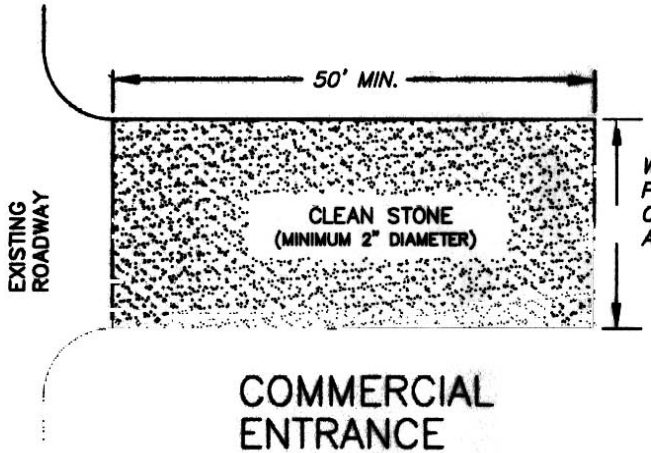

COMMERCIAL ENTRANCE PLAN VIEW

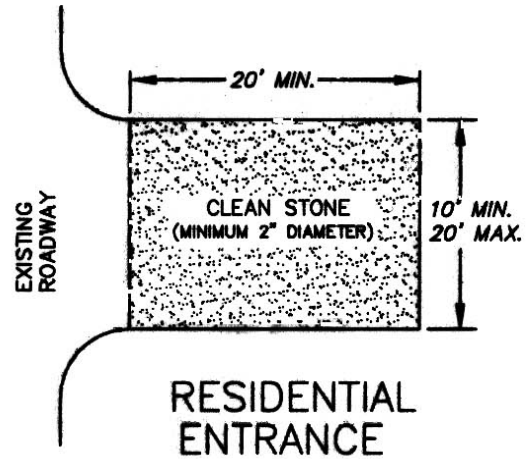

RESIDENTIAL ENTRANCE PLAN VIEW

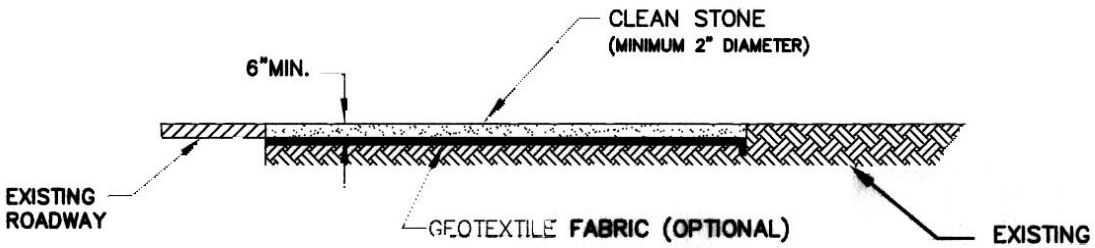

CROSS SECTION

NO.	DATE	DESCRIPTION	BY
1.	12/4/00	EFFECTIVE DATE	CCB

TEMPORARY CONSTRUCTION ENTRANCE

STANDARD DETAIL 4.07

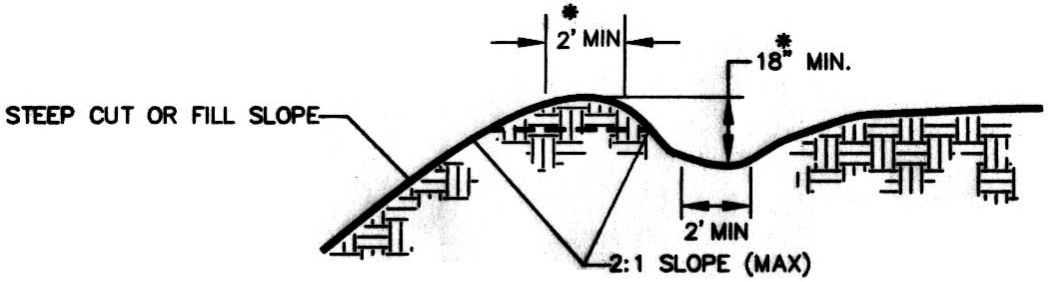

NOTE:

* DEPTH AND WIDTH OF DITCH/BERM SHALL DEPEND ON RUNOFF QUANTITY AND VELOCITY

CROSS SECTION

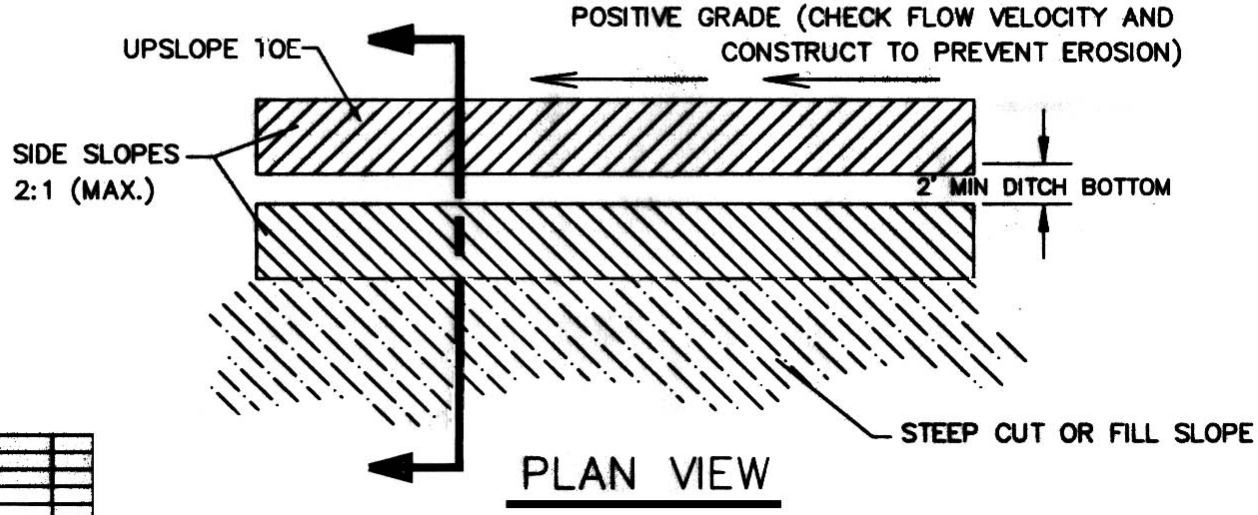

PLAN VIEW

NO.	DATE	DESCRIPTION	BY
1.	12/4/00	EFFECTIVE DATE	CDB

DIVERSION DITCH

STANDARD DETAIL 4.08

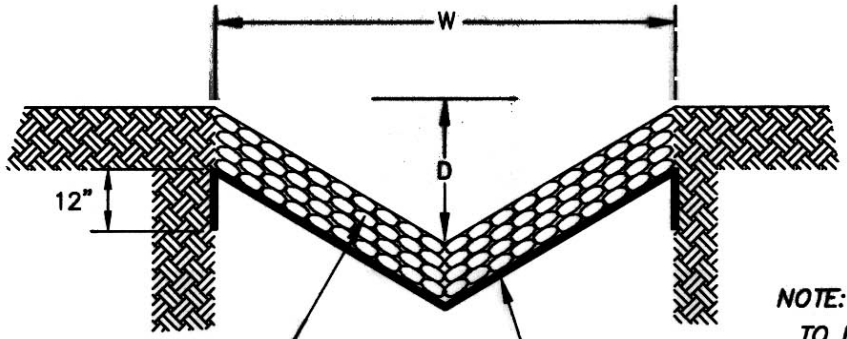

RIPRAP STONE SIZE AND DEPTH BASED ON DESIGN FLOW AND VELOCITY.(MIN. 12" THICKNESS)

GEOTEXTILE * FABRIC

TYPICAL V-BOTTOM DITCH

NOTE:

TO BE USED WHERE EXCESSIVE STORMWATER VELOCITIES PROHIBIT VEGETATIVE LININGS.

SIZE OF STONE MUST BE DETERMINED BY APPROPRIATE DESIGN PROCEDURE.

DIMENSIONS FOR D,B & W VARY ACCORDING TO DESIGN.

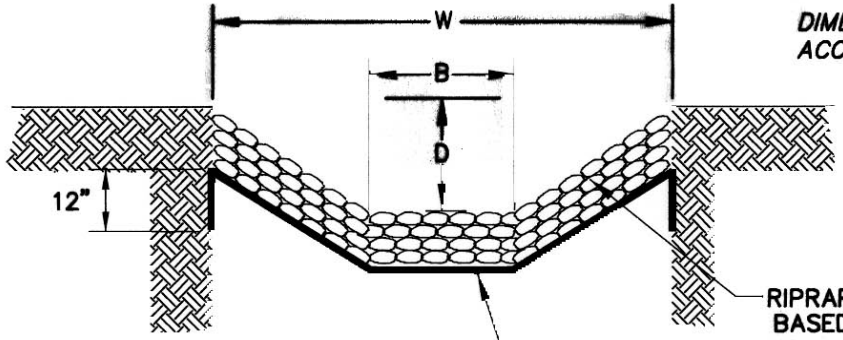

RIPRAP STONE SIZE AND DEPTH BASED ON DESIGN FLOW AND VELOCITY.(MIN. 12" THICKNESS)

GEOTEXTILE * FABRIC

TRAPEZOIDAL DITCH

*GRAVEL BEDDING (6" THICK) MAY BE USED IN LIEU OF GEOTEXTILE FABRIC.

NO.	DATE	DESCRIPTION	BY
1.	12/4/00	EFFECTIVE DATE	CCB

RIPRAP LINED CHANNELS

STANDARD DETAIL 4.09

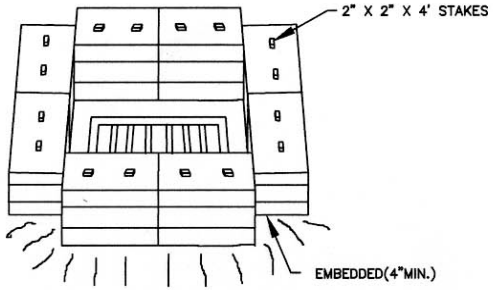

STRAW/HAY BALE
INLET PROTECTION

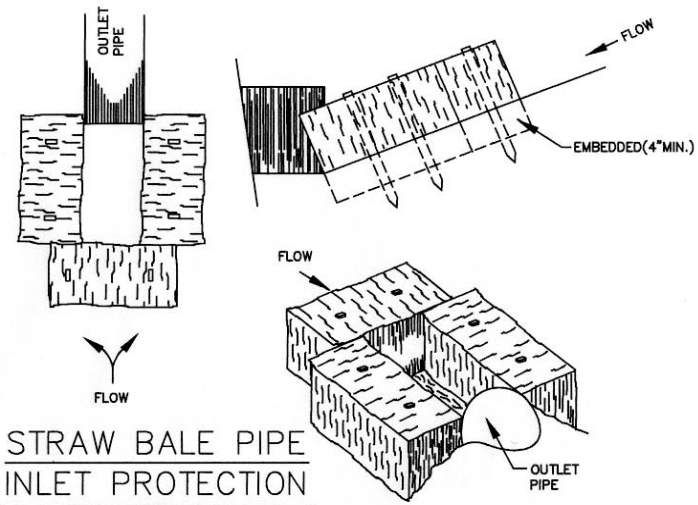

STRAW BALE PIPE
INLET PROTECTION

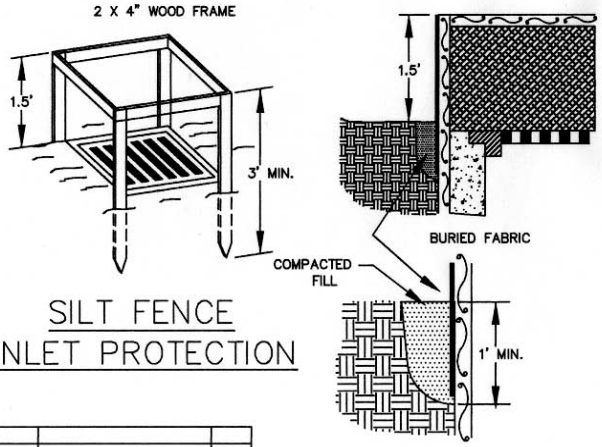

SILT FENCE
INLET PROTECTION

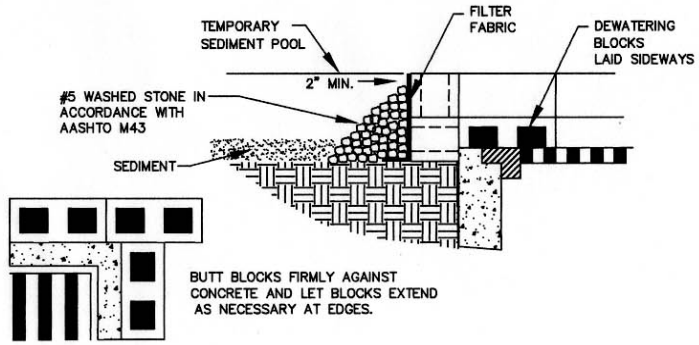

BLOCK AND GRAVEL BLOCK
DROP INLET PROTECTION

NO.	DATE	DESCRIPTION	BY
1.	12/4/00	EFFECTIVE DATE	CCB

INLET PROTECTION METHODS

STANDARD DETAIL
4.10

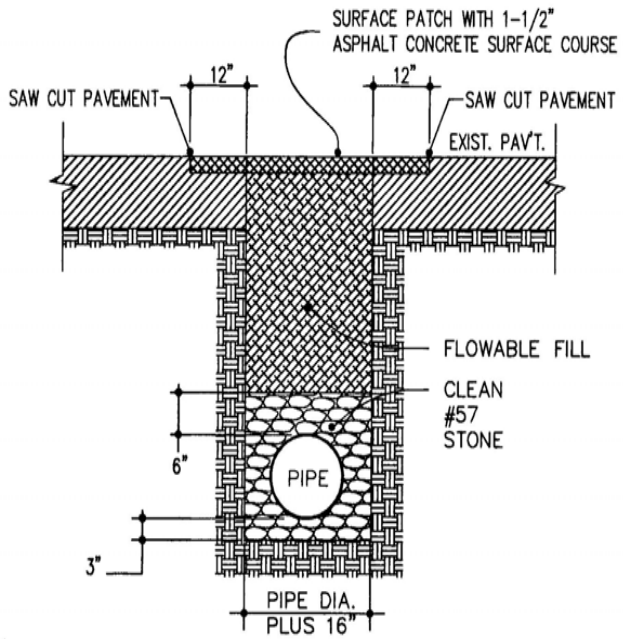

ASPHALT PAVEMENT

NOTE TO CONTRACTOR:

ALL PAVEMENT CUTS SHALL BE REPAIRED WITHIN A MAXIMUM OF THREE (3) DAYS FROM THE DATE THE CUT IS MADE. IF CONDITIONS DO NOT PERMIT A PERMANENT REPAIR WITHIN THE GIVEN TIME LIMIT, PERMISSION TO MAKE A TEMPORARY REPAIR MUST BE OBTAINED FROM THE PUBLIC WORKS DIRECTOR.

NO.	DATE	DESCRIPTION	BY
1.	12/4/00	EFFECTIVE DATE	CCB

STANDARD TRENCH AND PAVEMENT REPAIR SECTION

STANDARD DETAIL 5.01

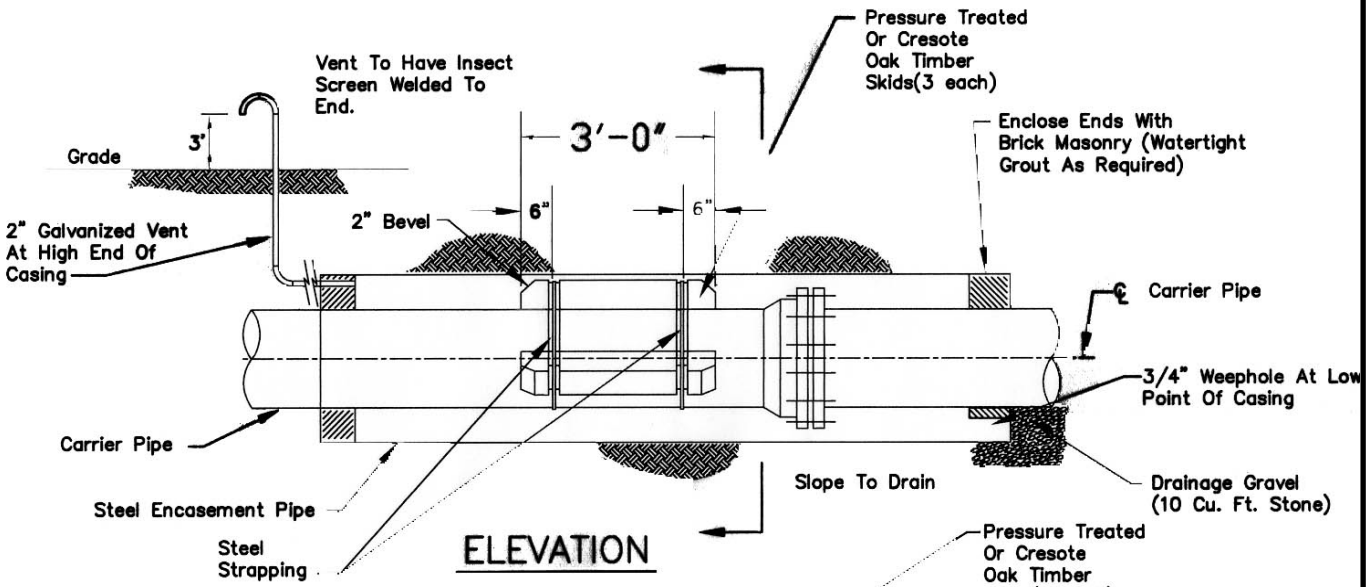

ELEVATION

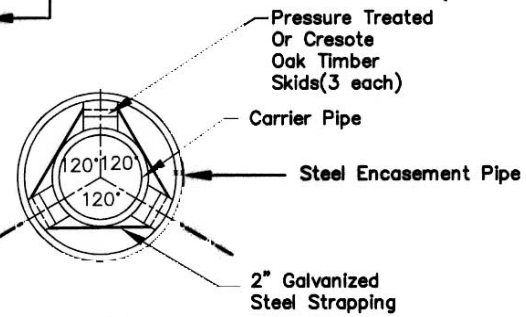

SECTION

NOTES:

1. *METAL "SPIDERS" MAY BE USED IF APPROVED BY PUBLIC WORKS DIRECTOR FOR SUPPORT OF THE CARRIER PIPE WITHIN THE CASING PIPE.*
2. *TIMBER SKIDS SHALL BE SIZED TO PREVENT CONTACT OF CARRIER PIPE AND JOINT WITH ENCASEMENT PIPE.*
3. *MINIMUM 2 SKIDS PER STANDARD PIPE LENGTH INSTALLED.*
4. *ALL RAILROAD CROSSINGS REQUIRE RAILROAD APPROVAL PRIOR TO ANY CONSTRUCTION.*

NO.	DATE	DESCRIPTION	BY
1.	12/4/00	EFFECTIVE DATE	CCB

PIPE ENCASEMENT DETAIL

STANDARD DETAIL 5.02

*** ALL WATER LINES WITHIN THREE FEET OF BACK OF CURB MEASURED FROM CENTER LINE OF PIPE SHALL BE BACKFILLED ABOVE EMBEDMENT MATERIAL TO WITHIN ONE FOOT OF FINISHED GROUND ELEVATION WITH NO. 57 STONE.

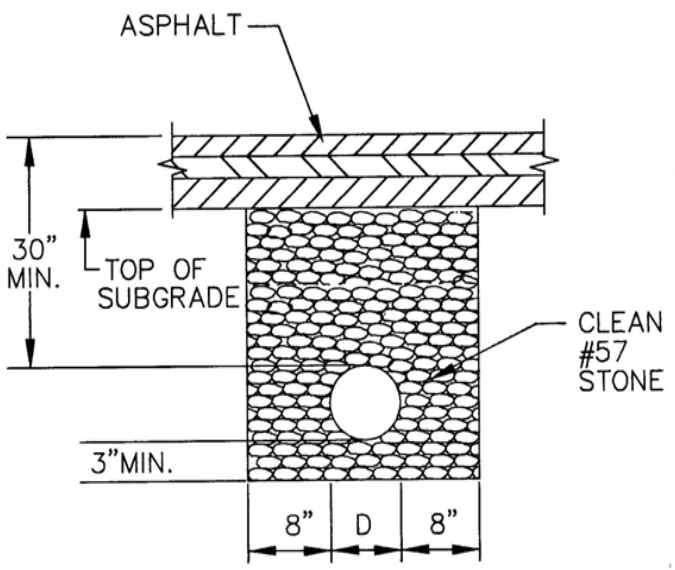

NEW PAVED AREAS *

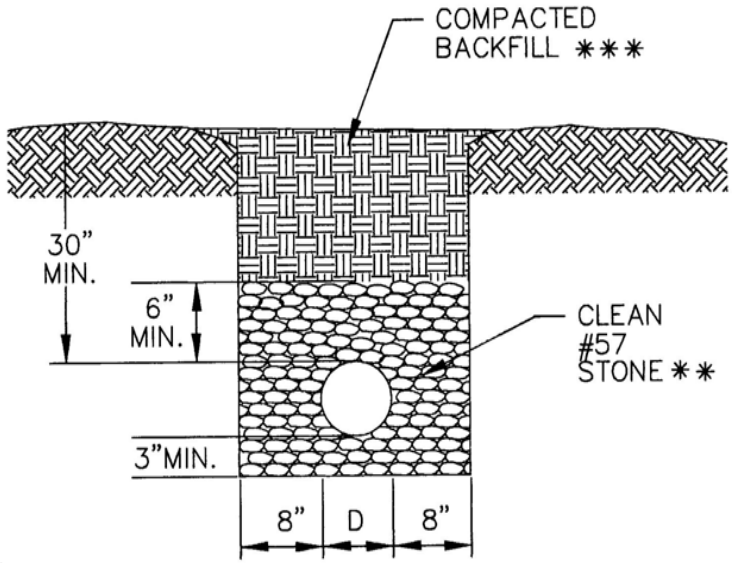

UNPAVED AREAS (PVC PIPE)

* SEE STANDARD DRAWING 5.0 FOR INSTALLATION UNDER EXISTING ROADWAYS.

** DUCTILE IRON PIPE MAY OPTIONALLY BE BEDDED WITH CLASS I, II, OR III MATERIALS IN ACCORDANCE WITH ASTM D2321.

NO.	DATE	DESCRIPTION	BY
1.	12/4/00	EFFECTIVE DATE	CCB

BACKFILLING & COMPACTION OF WATER LINES

STANDARD DETAIL 6.01

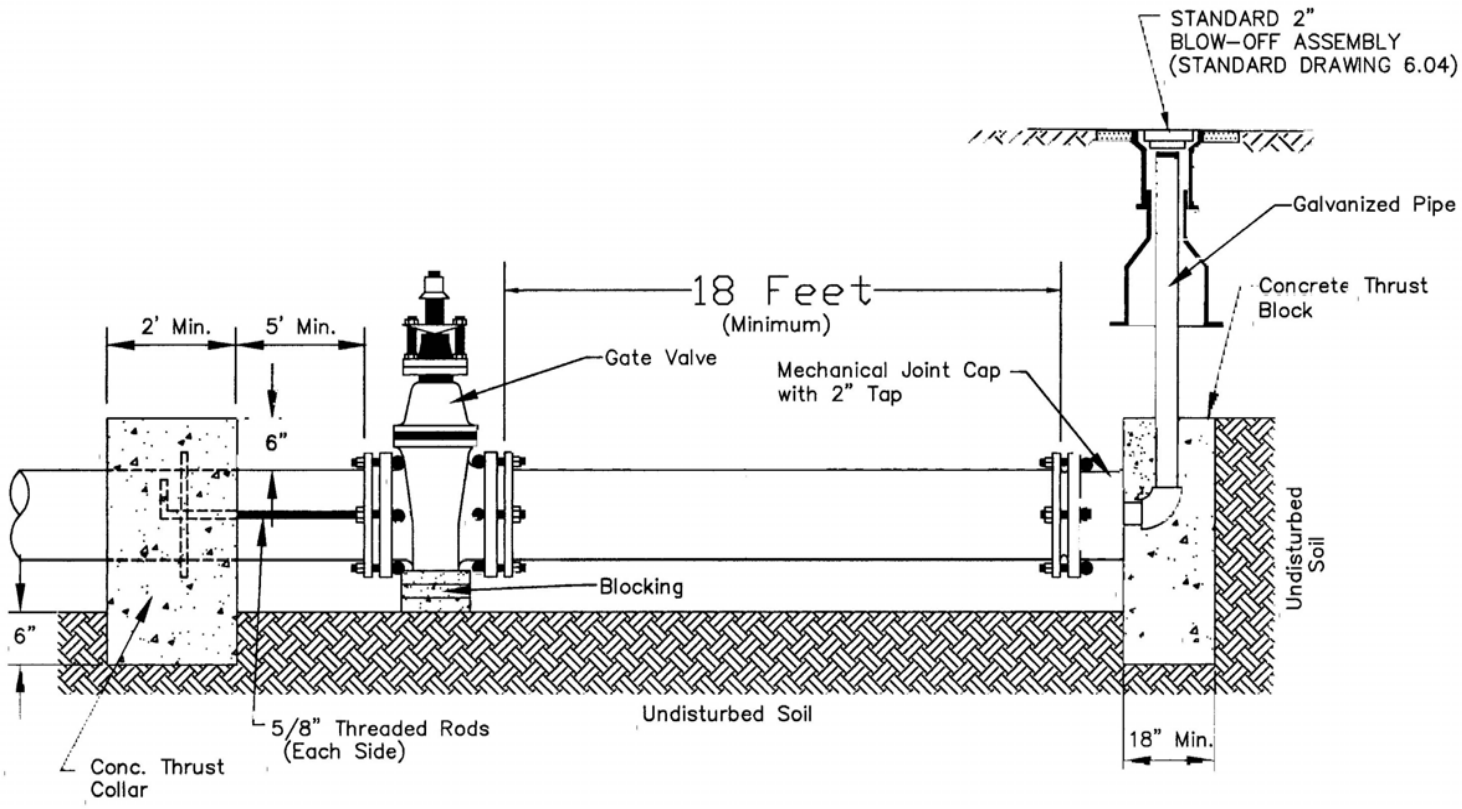

NOTE: THIS DETAIL SHALL APPLY ONLY TO TEMPORARY CAPPING. PERMANENT DEAD END LINES TO BE IN ACCORDANCE W/STANDARD DETAIL NO. 6.04.

NO.	DATE	DESCRIPTION	BY
1.	12/4/00	EFFECTIVE DATE	CCB

STANDARD CAPPING AND BLOW-OFF ASSEMBLY DETAIL FOR FUTURE EXTENSION

STANDARD DETAIL 6.02

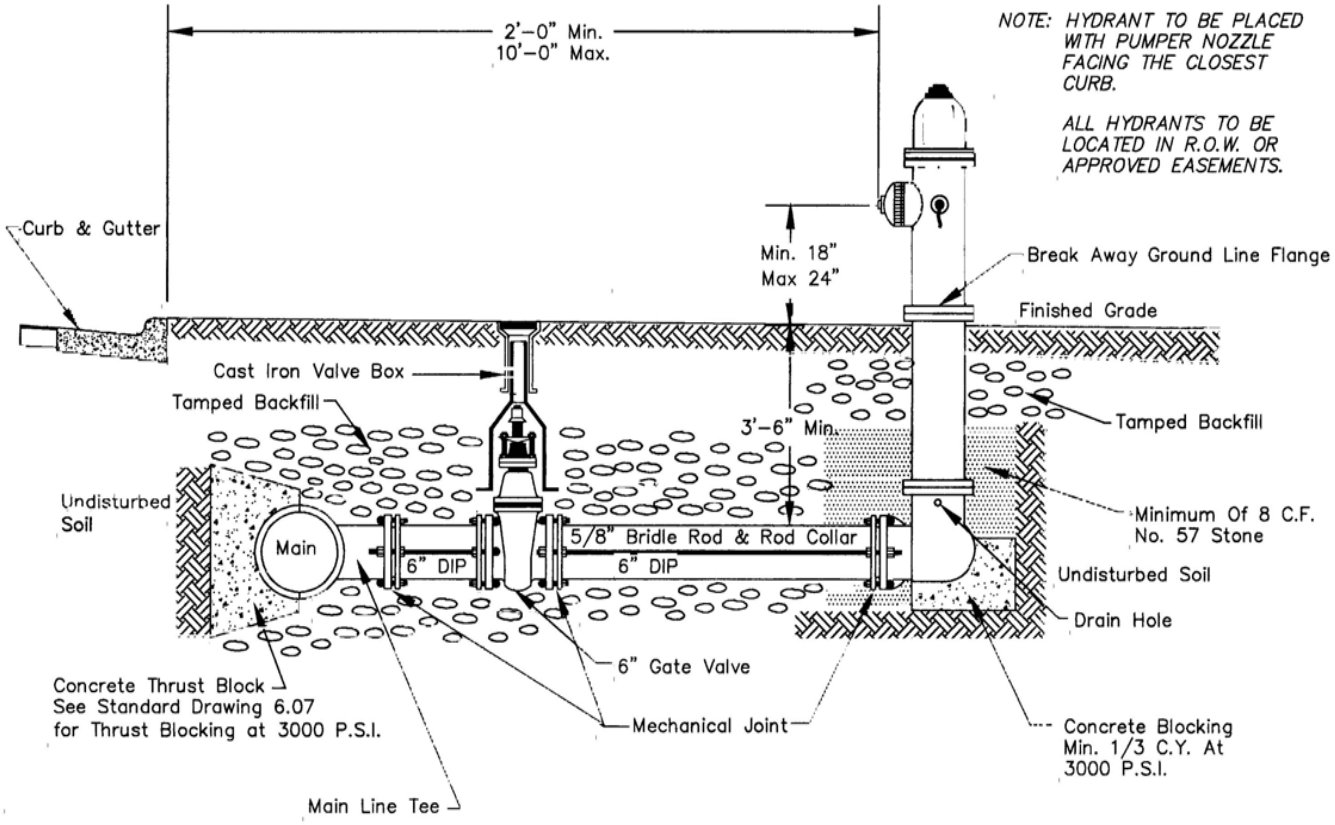

NOTE: HYDRANT TO BE PLACED WITH PUMPER NOZZLE FACING THE CLOSEST CURB.

ALL HYDRANTS TO BE LOCATED IN R.O.W. OR APPROVED EASEMENTS.

NOTE: TOP OF BLOCKING TO BE 2" FROM HYDRANT DRAIN HOLES.
MINIMUM VALVE OPENING OF 5-1\4"
STEAMER SIZE 4-1\2"
HOSE CONNECTION SIZE 2-1\2"

NO.	DATE	DESCRIPTION	BY
1.	12/4/00	EFFECTIVE DATE	CCB

STANDARD FIRE HYDRANT INSTALLATION

STANDARD DETAIL 6.03

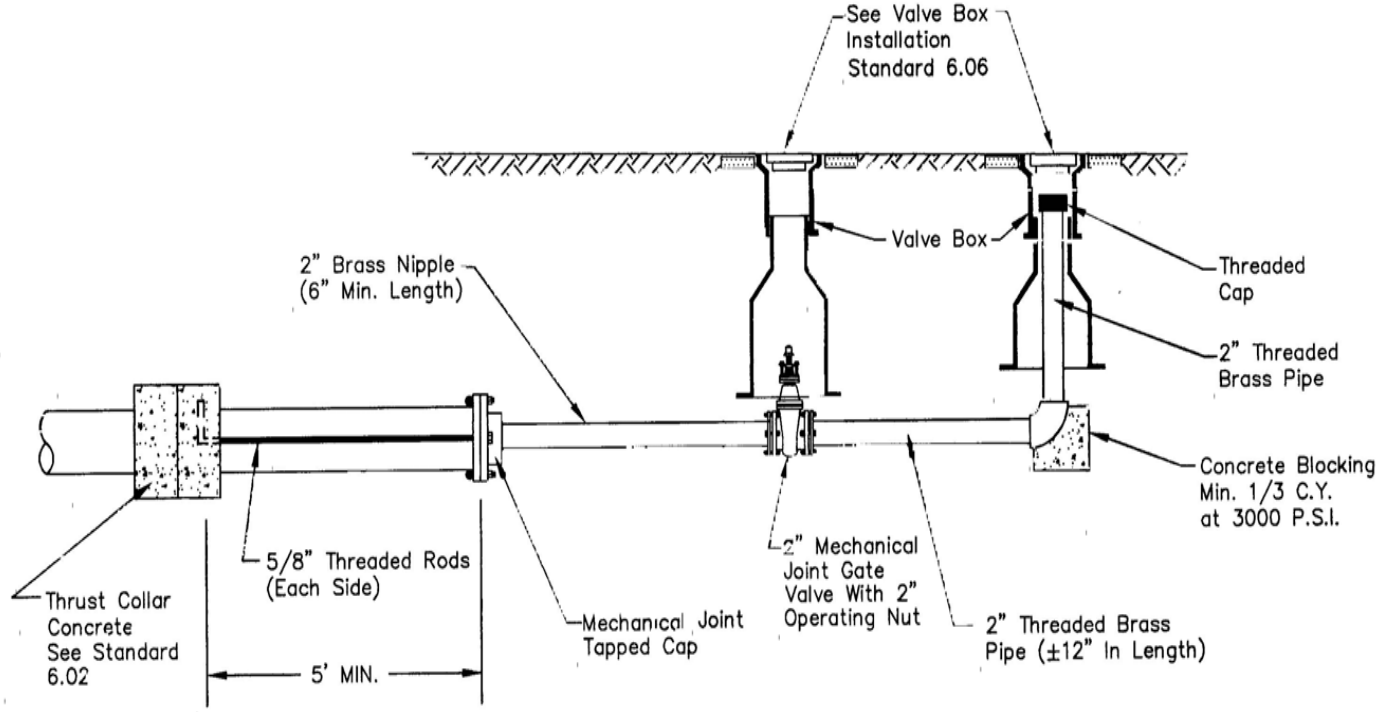

NOTE: SEE STANDARD 6.01 FOR BEDDING/BACKFILL REQUIREMENTS

NO.	DATE	DESCRIPTION	BY
1.	12/4/00	EFFECTIVE DATE	CCB

STANDARD 2" BLOW-OFF ASSEMBLY FOR PERMANENT DEAD END MAIN

STANDARD DETAIL 6.04

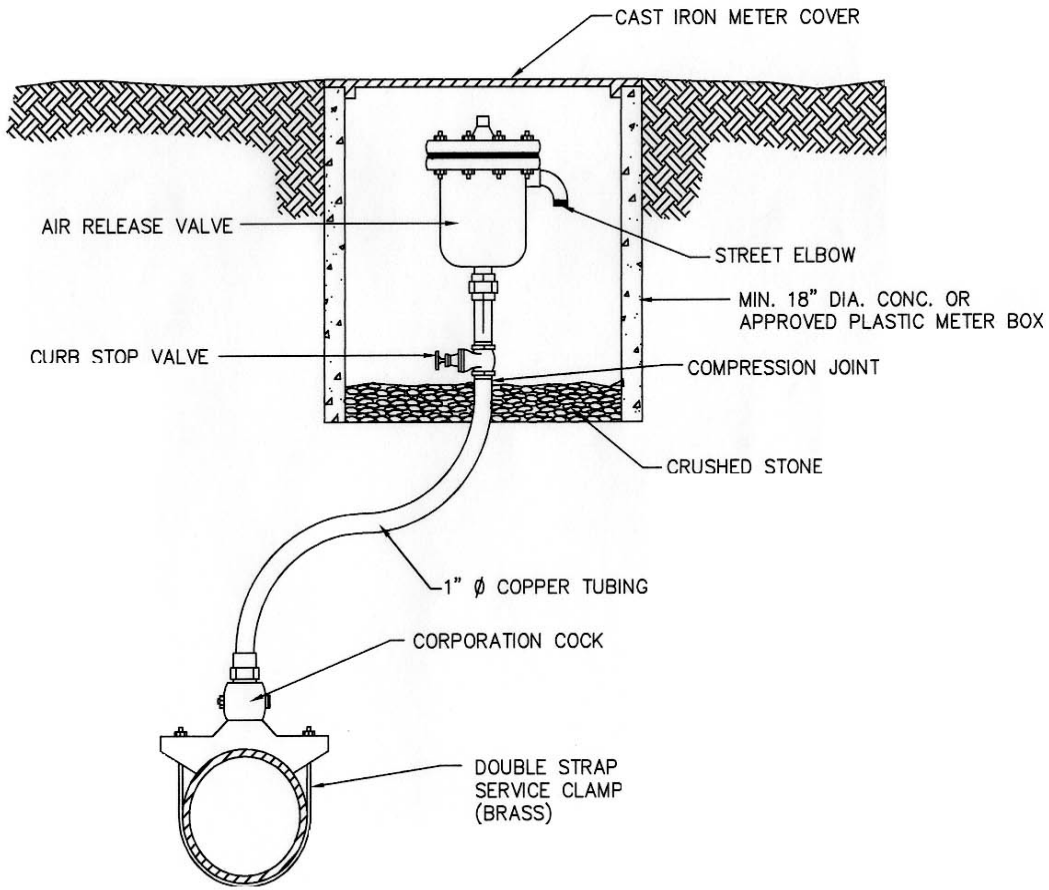

NO.	DATE	DESCRIPTION	BY
1.	12/4/00	EFFECTIVE DATE	CCB

AIR RELEASE VALVE

STANDARD DETAIL

6.05

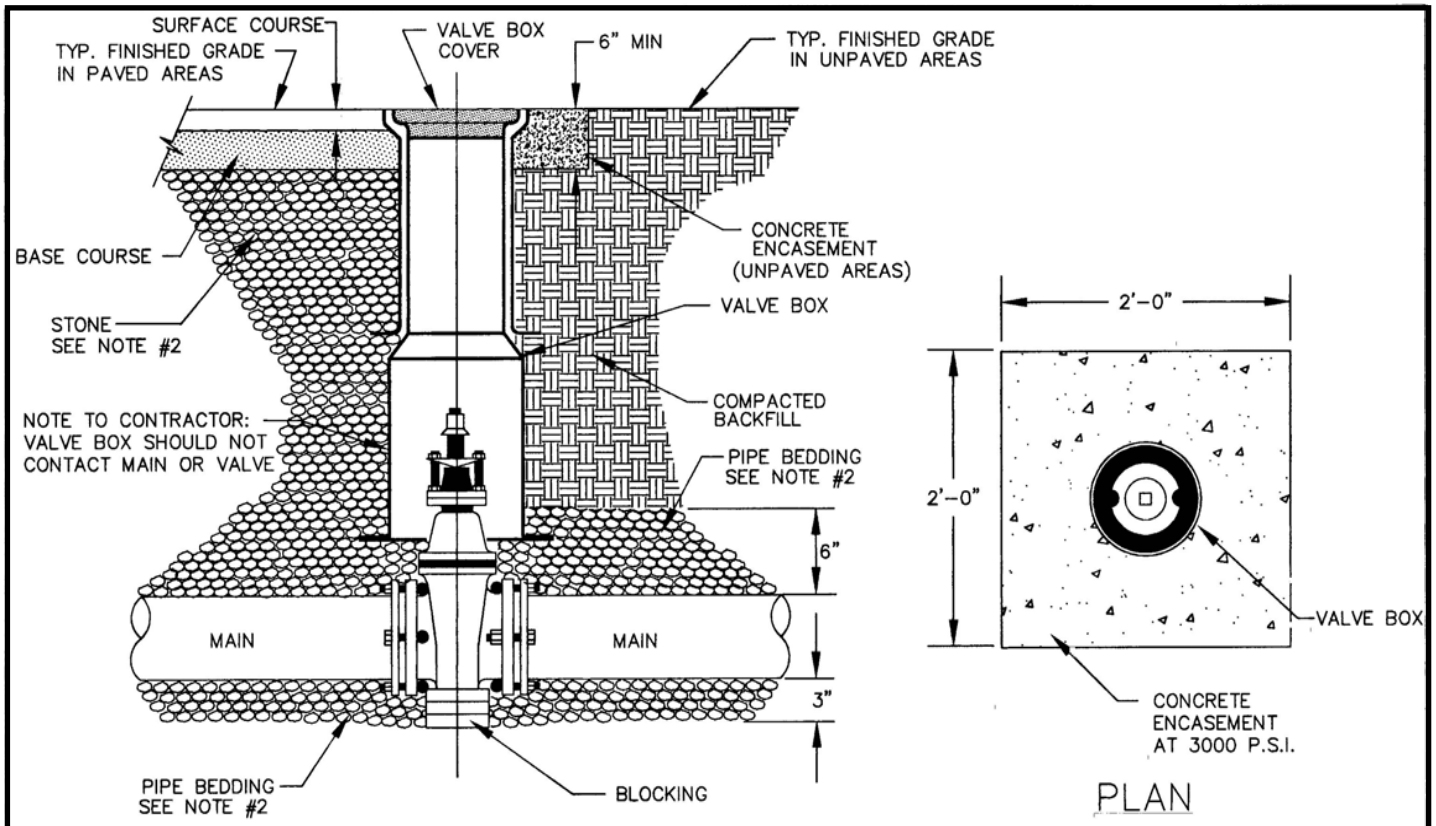

NOTE:
1. *VALVE OPERATING NUT MUST BE NO MORE THAN FOUR FEET FROM THE SURFACE.*
2. *SEE STANDARD 6.01 FOR BEDDING/BACKFILL REQUIREMENTS.*

NO.	DATE	REVISIONS	BY
1.	12/4/00	EFFECTIVE DATE	CCB

STANDARD VALVE BOX INSTALLATION

STANDARD DETAIL 6.06

TABLE OF DIMENSIONS FOR CONCRETE BLOCKING–HORIZONTAL BENDS

	90 DEGREE					45 DEGREE					22 1/2 DEGREE					11 1/4 DEGREE					TEES AND PLUGS				
PIPE SIZE	H1	H2*	V	D	CU.FT.	H1	H2*	V	D	CU.FT.	H1	H2*	V	D	CU.FT.	H1	H2*	V	D	CU.FT.	H1	H2*	V	D	CU.FT.
3"	18"	10"	12"	8"	0.71	14"	5.5"	9"	8"	0.40	10"	5.5"	7"	8"	0.27	7"	5.5"	5"	8"	0.19	16"	10"	10"	8"	0.58
4"	24"	12"	16"	8"	1.16	18"	7"	12"	8"	0.66	13"	7"	9"	8"	0.43	9"	7"	6"	8"	0.28	21"	12"	14"	8"	0.95
6"	36"	15"	24"	11"	3.31	27"	9"	18"	9"	1.54	19"	9"	13"	8"	0.81	14"	9"	9"	8"	0.53	31"	15"	21"	8"	1.92
8"	48"	16"	32"	16"	8.13	36"	10"	24"	13"	3.76	26"	10"	17"	8"	1.33	18"	10"	12"	8"	0.81	41"	17"	27"	12"	4.66
10"	60"	20"	40"	20"	15.72	45"	12"	30"	16"	7.12	32"	12"	21"	10"	2.48	23"	12"	15"	8"	1.22	51"	20"	41"	16"	11.14
12"	72"	22"	48"	25"	27.83	53"	13"	36"	20"	12.36	38"	13"	26"	13"	4.56	27"	13"	18"	8"	1.63	61"	22"	41"	20"	16.73

BASED ON 1000 PSF SOIL BEARING VALUE AND 150 PSI WATER PRESSURE IN PIPE W/NO SF
* DIMENSIONS FOR STANDARD FITTINGS SHOWN. MODIFY COMPACT FITTINGS
ALL CONCRETE TO BE 3000# (28 DAY STRENGTH). NO CONCRETE SHALL COVER BOLTS OR GLANDS.

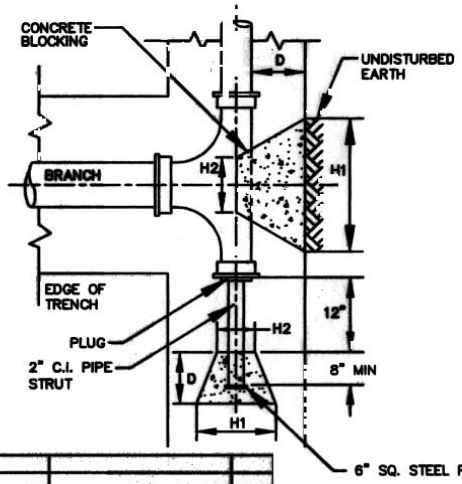

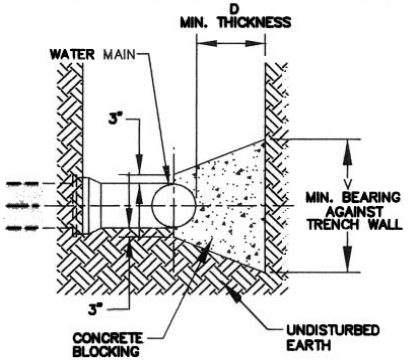

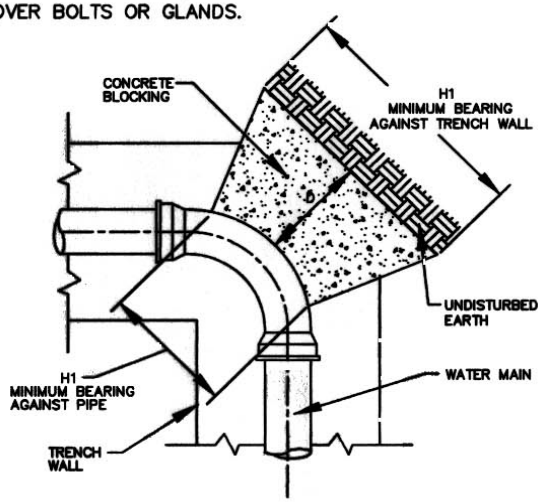

NOTE: DIMENSIONS ARE CONTROLLED BY DIAMETER OF BRANCH MAIN.

NO.	DATE	DESCRIPTION	BY
1.	12/4/00	EFFECTIVE DATE	CDB

STANDARD REACTION BLOCKING–HORIZONTAL BEND

STANDARD DETAIL 6.07

GRAVITY BLOCKING VOLUMES FOR VERTICAL BENDS(CU. FT.)

Based on 150 psi pressure and 140 pcf concrete

Pipe Size	45 Deg Bends	22 1/2 Deg Bends	11 1/4 Deg Bends	Area Pipe(Sq. In.)
3"	5.36	2.90	1.48	7.0686
4"	9.52	5.15	2.63	12.5664
6"	21.42	11.59	5.91	28.2743
8"	38.08	20.61	10.51	50.2655
10"	59.50	32.20	16.42	78.5398
12"	85.68	46.37	23.64	113.0973

HORIZONTAL THRUST IN POUNDS FOR 150 PSI WATER PRESSURE @ VERTICAL BENDS

Provide adequate bearing area to resist Horizontal Thrust

Pipe Size	45 Deg Bends	22 1/2 Deg Bends	11 1/4 Deg Bends	Area Pipe(Sq. In.)
3"	311	81	20	7.0686
4"	552	143	36	12.5664
6"	1242	323	81	28.2743
8"	2208	574	145	50.2655
10"	3451	897	226	78.5398
12"	4969	1291	326	113.0973

MINIMUM AREA(Sq. Ft.) REQ'D. TO RESIST HORIZONAL THRUST @ VERTICAL BENDS

Based on 1000 psf Soil Bearing Value & 150 psi Water Pressure

Pipe Size	45 Deg Bends	22 1/2 Deg Bends	11 1/4 Deg Bends
3"	0.31	0.08	0.02
4"	0.55	0.14	0.04
6"	1.24	0.32	0.08
8"	2.21	0.57	0.14
10"	3.45	0.90	0.23
12"	4.97	1.29	0.33

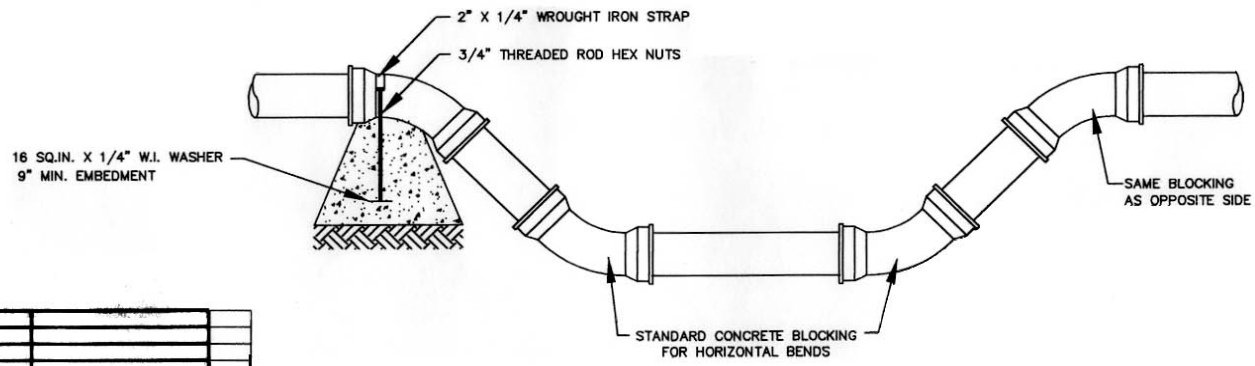

NO.	DATE	DESCRIPTION	BY
1.	12/4/00	EFFECTIVE DATE	GSB

STANDARD REACTION BLOCKING–VERTICAL BEND

STANDARD DETAIL 6.07A

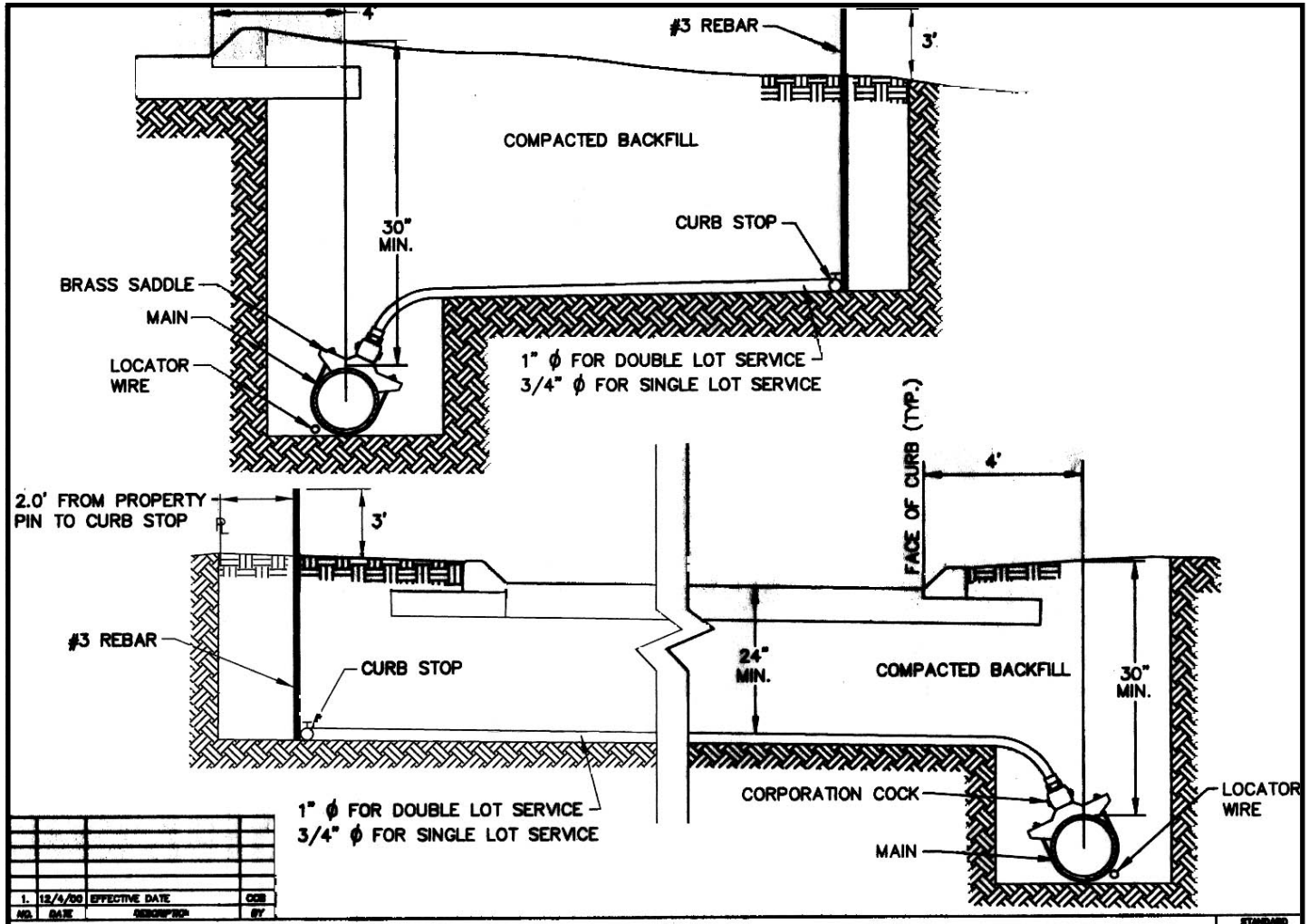

NO.	DATE	DESCRIPTION	BY
1.	12/6/00	EFFECTIVE DATE	CCB

WATER LATERAL DETAILS

STANDARD DETAIL 6.08

For providing valves and connections
for both fire line and domestic meter

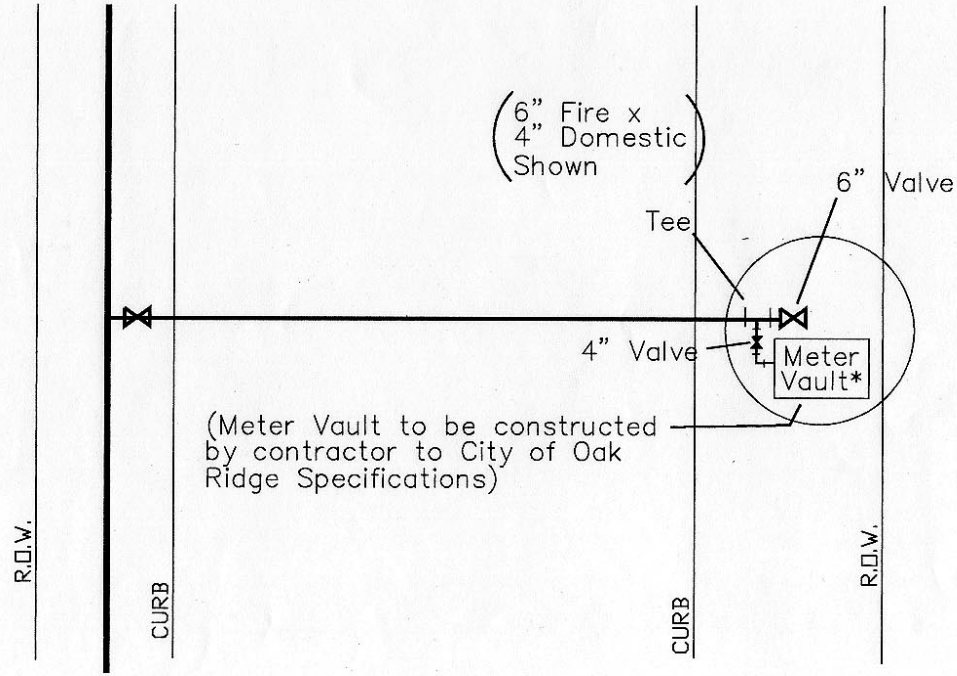

*SEE METER VAULT DETAIL–STANDARD DETAIL 6.10

NO.	DATE	DESCRIPTION	BY
1.	12/4/00	EFFECTIVE DATE	CCB

COMMERCIAL WATER LATERAL LAYOUT/METER VAULT

STANDARD DETAIL
6.09

SIZE	2"	3"	4"	6"	8"
Min. Size Access Dia.	24"	24"	24"	30"	36"
Min. Size Access Rec.	14"X22"	14"X22"	14"X22"	20"X22"	24"X32"
A	86"	88"	91"	114"	120"
B	68"	68"	72"	78"	78"
C	36"	39"	41-1/2"	45-1/2"	34-1/2"
D	–	–	–	–	–
E	4-1/2"	8"	9"	10-1/2"	11-1/2"
F	2-1/4"	4"	5"	6"	7-1/2"
G (OPEN)	14-1/2"	22-1/16"	25"	32-3/4"	41-1/2"
H	17-11/16"	20"	24"	30"	30"
J	42-7/8"	62"	73"	90"	96-1/2"
K	8-3/16"	10-1/2"	12-3/4'	17"	20-1/4"
# L (STRAINER)	8-1/2"	8-1/2"	9"	9"	–

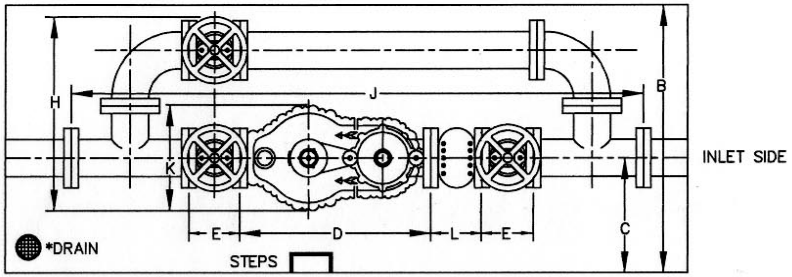

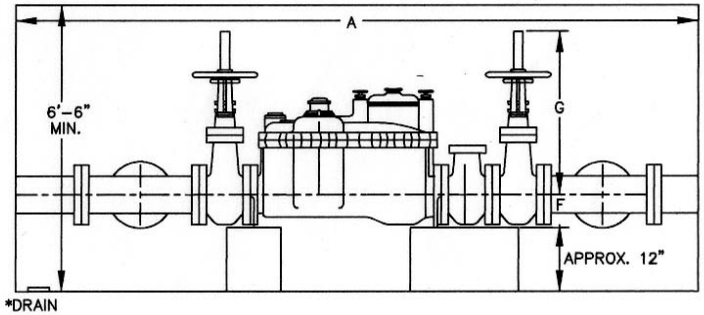

"D" DIMENSIONS

2" METER	
ROCKWELL	15-1/2"
BADGER	17"
NEPTUNE	17"
HERSEY	17"

3" METER	
ROCKWELL	17"
BADGER	17"
NEPTUNE	17"
HERSEY	24"

4" METER	
ROCKWELL	20"
BADGER	24"
NEPTUNE	20"
HERSEY	29"

6" METER	
ROCKWELL	24"

COVER

COVER WILL BE OF EITHER
1/2" PLATE STEEL OR
4" REINFORCED CONCRETE.

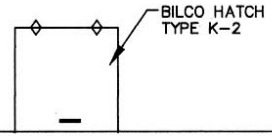

*THE METER PIT MUST BE DESIGNED AND INSTALLED TO BE FREE FROM STANDING WATER.
EITHER A PIPED GRAVITY FLOW DRAIN OR AN ELECTRIC SUMP PUMP MUST BE PROVIDED.

#VERIFY STRAINER LENGTHS PRIOR TO ACTUAL PLUMBING INSTALLATION.

NO.	DATE	DESCRIPTION	BY
1.	12/4/00	EFFECTIVE DATE	CCB

METER VAULT

STANDARD DETAIL

6.10

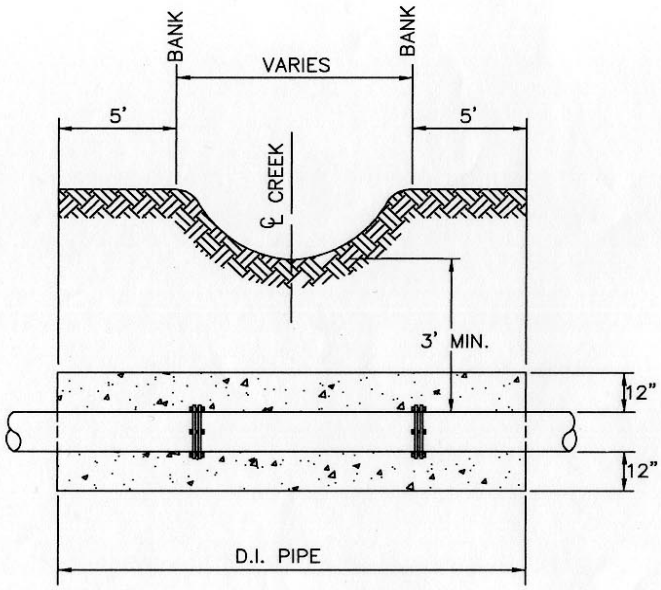

CROSS SECTION

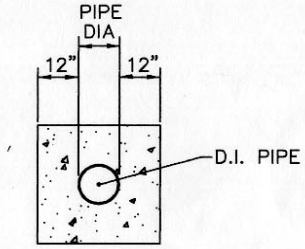

END VIEW

NOTE:
CONCRETE SHALL BE 3,000 P.S.I.

NO.	DATE	DESCRIPTION	BY
1.	12/4/00	EFFECTIVE DATE	CCB

STANDARD CONCRETE ENCASEMENT FOR STREAM CROSSING

STANDARD DETAIL 7.01

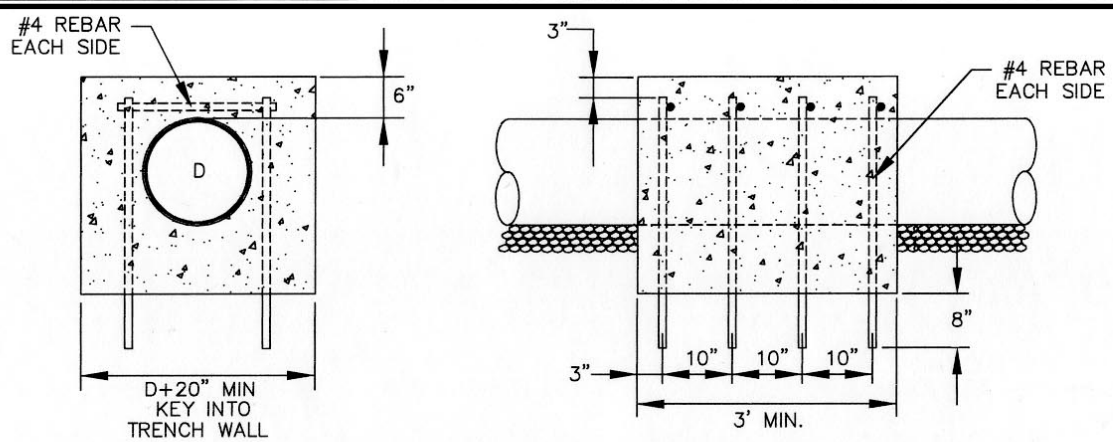

DETAIL–CONCRETE ANCHORS

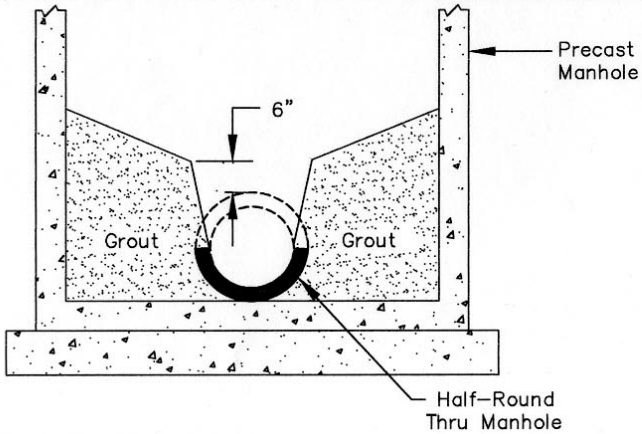

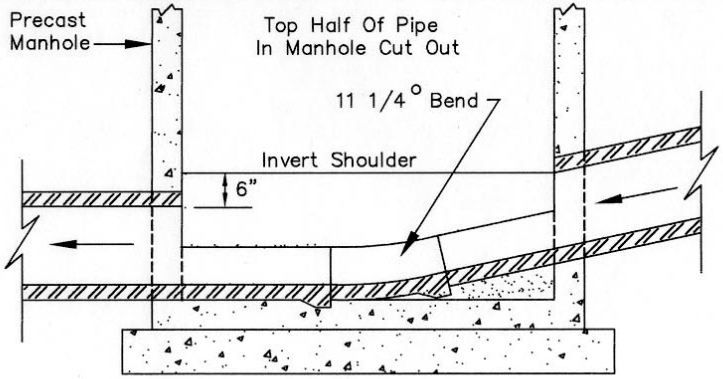

NOTE: 1) NO HORIZONTAL ALIGNMENT CHANGE CAN BE MADE WITHIN THIS MANHOLE TYPE. USE ON GRADES 18% OR GREATER.
2) CONSTRUCT ANCHORS BELOW BELL WHEN POSSIBLE.

HIGH VELOCITY MANHOLE

NO.	DATE	DESCRIPTION	BY
1.	12/4/00	EFFECTIVE DATE	CCB

STANDARD HIGH VELOCITY MANHOLE INVERT AND CONCRETE ANCHORING

STANDARD DETAIL
7.02

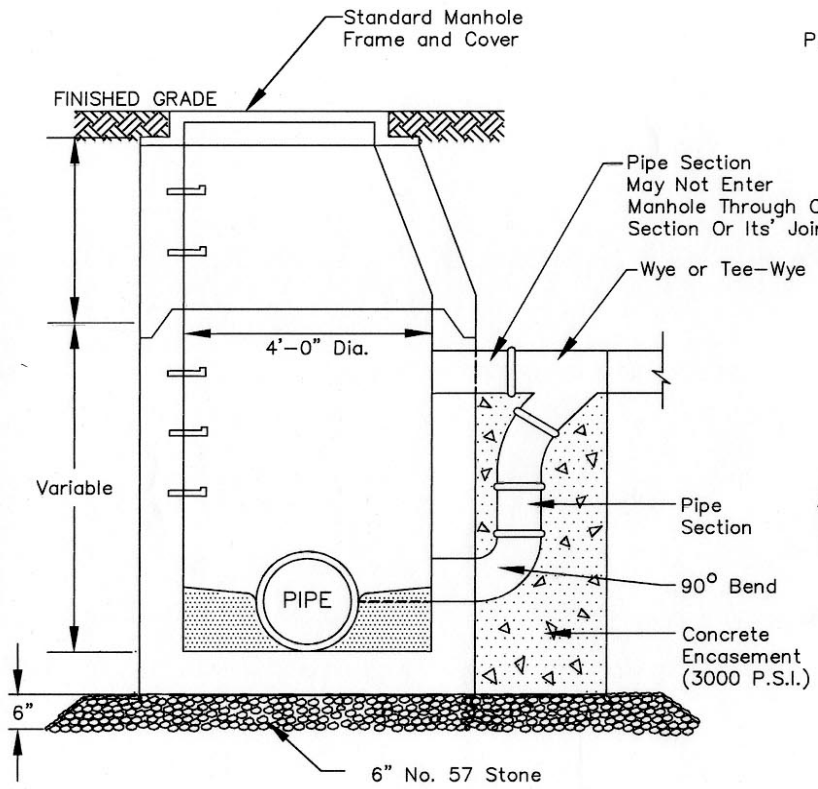

SECTION

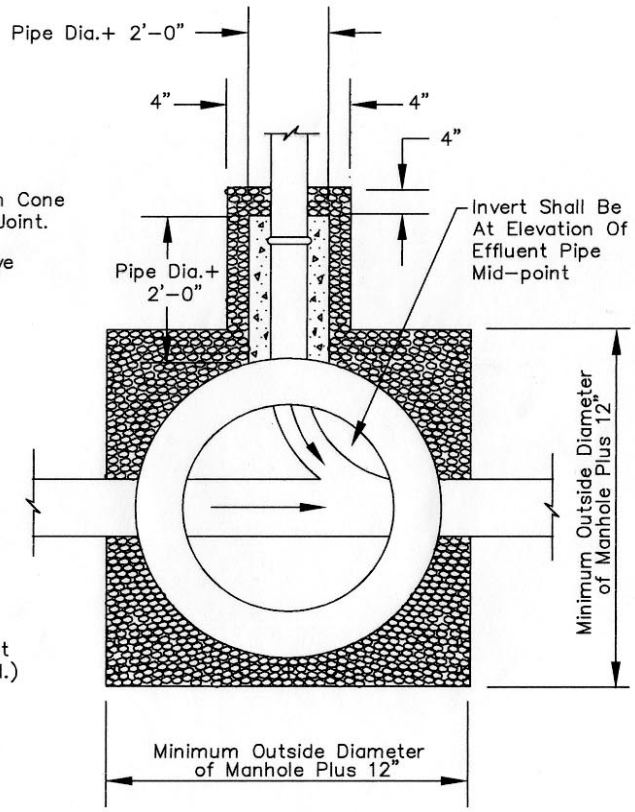

PLAN

NOTE TO CONTRACTOR:

TO BE CONSTRUCTED FOR ALL DROPS OVER 24".

NO.	DATE	DESCRIPTION	BY
1.	12/4/00	EFFECTIVE DATE	CCB

STANDARD OUTSIDE DROP MANHOLE

STANDARD DETAIL 7.03

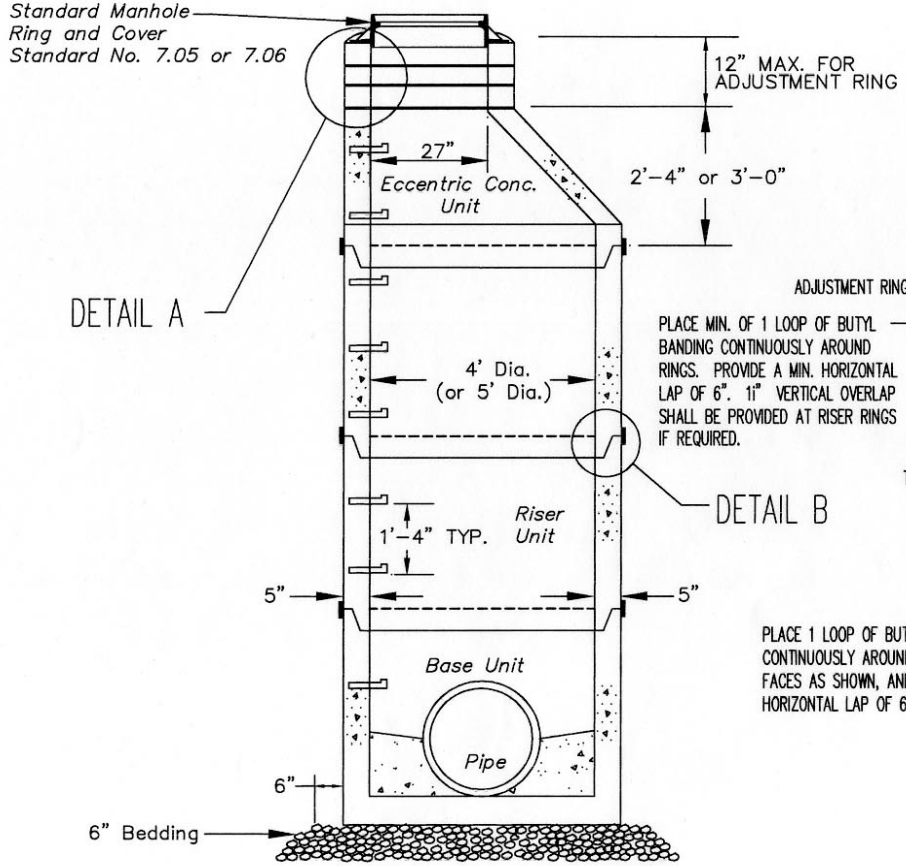

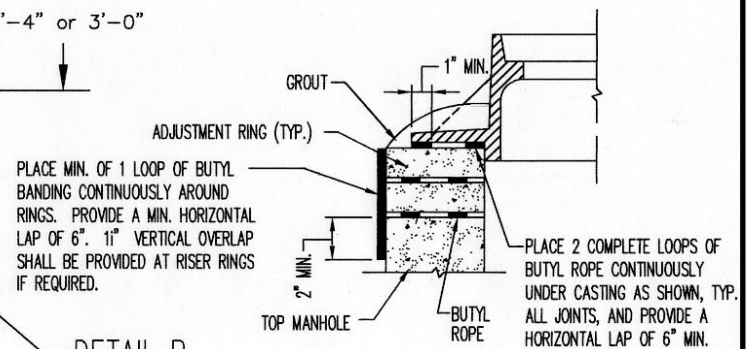

DETAIL A

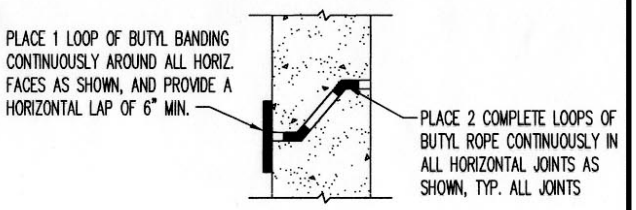

DETAIL B

BUTYL ROPE MATERIAL SHALL HAVE A NOMINAL CROSS SECTION DIMENSION OF ONE INCH FOR 4 FT. DIA. MANHOLES AND ONE AND ONE HALF INCHES FOR 5 FT. AND 6 FT. DIA. MANHOLES.

NO.	DATE	DESCRIPTION	BY
1.	12/4/00	EFFECTIVE DATE	CCB

STANDARD PRECAST CONCRETE MANHOLE

STANDARD DETAIL 7.04

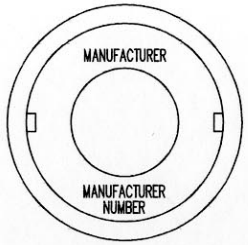

COVER BACK

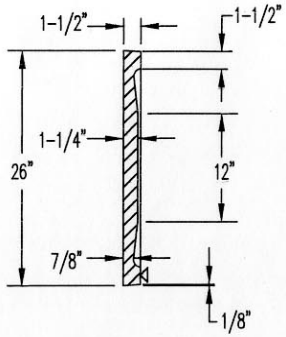

COVER SECTION

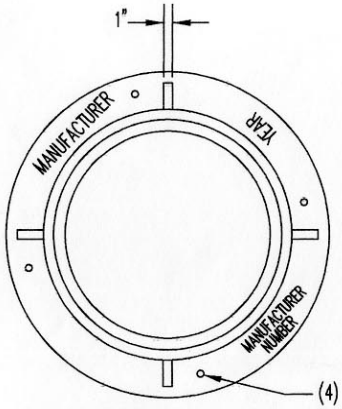

(4) 1" HOLES EQUALLY SPACED ON 32-1/2" DIA. BOLT CIRCLE

FRAME TOP VIEW

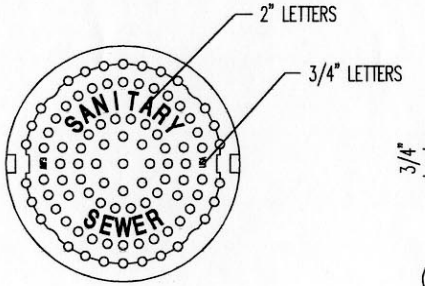

COVER FACE

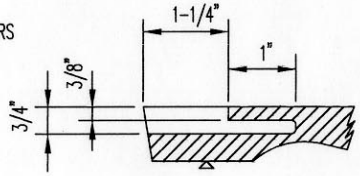

(2) TYPE TWO NON-PENETRATING PICKHOLES

PICKHOLE DETAIL

▽ MACHINED BEARING SURFACE

ESTIMATE WEIGHT

COVER 165 LBS
FRAME 250 LBS
TOTAL 415 LBS

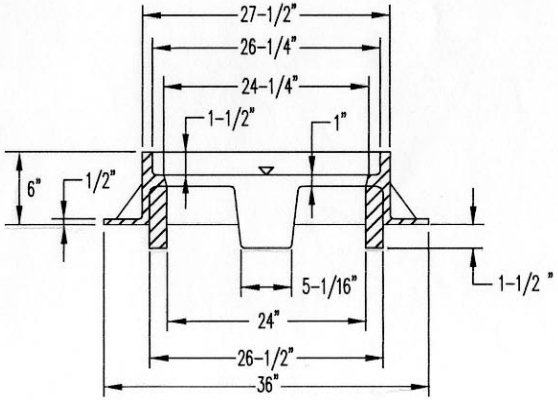

FRAME SECTION

NO.	DATE	DESCRIPTION	BY
1.	12/4/00	EFFECTIVE DATE	CCB

MANHOLE FRAME & COVER

STANDARD DETAIL

7.05

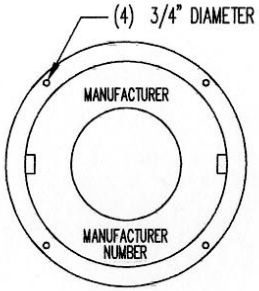

COVER BACK

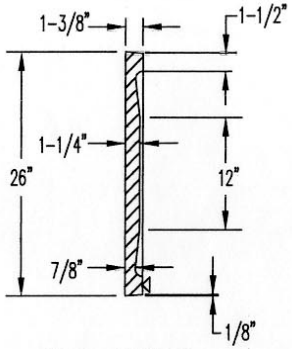

COVER SECTION

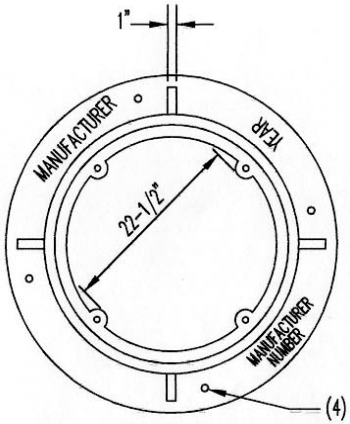

(4) 1" HOLES EQUALLY SPACED ON 32-1/2" DIA. BOLT CIRCLE

FRAME TOP VIEW

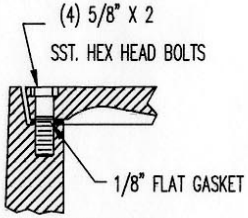

WATERTIGHT DETAIL

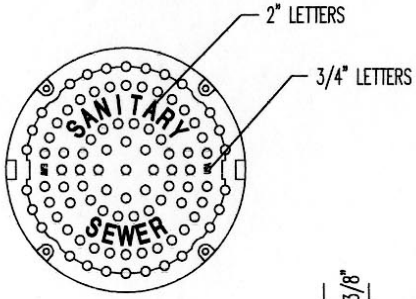

COVER FACE

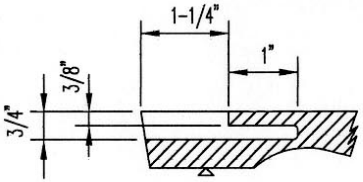

(2) TYPE TWO NON-PENETRATING PICKHOLES

PICKHOLE DETAIL

▽ MACHINED BEARING SURFACE

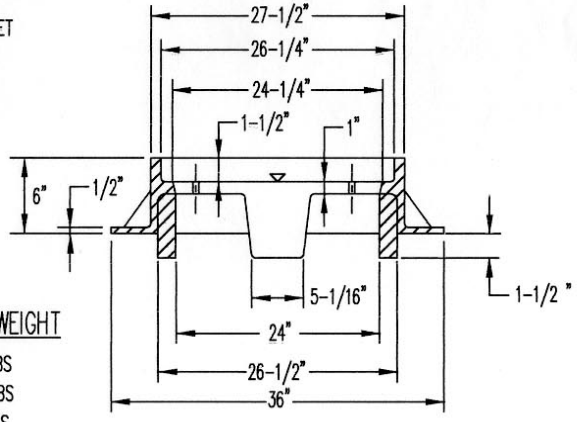

FRAME SECTION

ESTIMATE WEIGHT

COVER 165 LBS
FRAME 250 LBS
TOTAL 415 LBS

NO.	DATE	DESCRIPTION	BY
1.	12/4/00	EFFECTIVE DATE	CCB

WATERTIGHT MANHOLE FRAME & COVER

STANDARD DETAIL 7.06

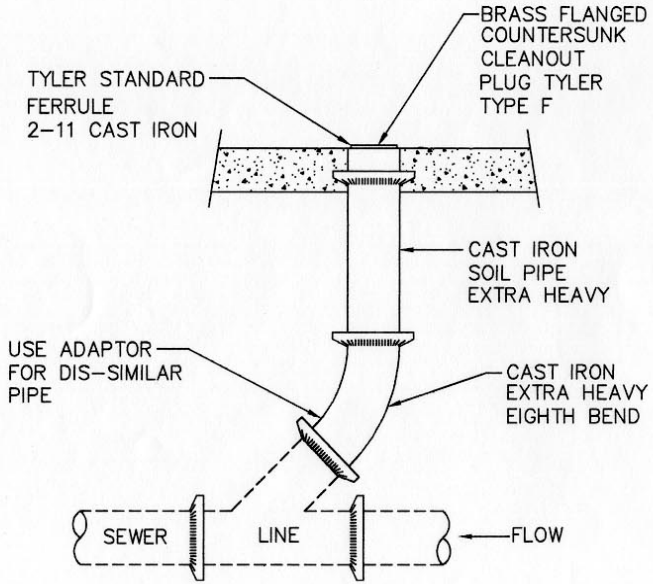

TRAFFIC AREA

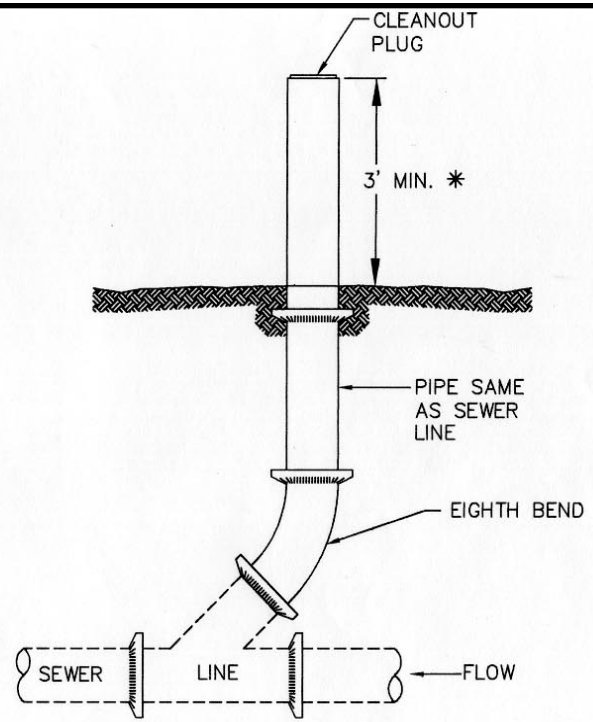

NON-TRAFFIC AREA

* CLEANOUT SHALL EXTEND 3' ABOVE FINISHED GRADE TO MARK SEWER SERVICE CONNECTIONS UNTIL BUILDING CONNECTION IS MADE.

NO.	DATE	DESCRIPTION	BY
1.	12/4/00	EFFECTIVE DATE	CCB

EXTERIOR CLEANOUT

STANDARD DETAIL 7.07

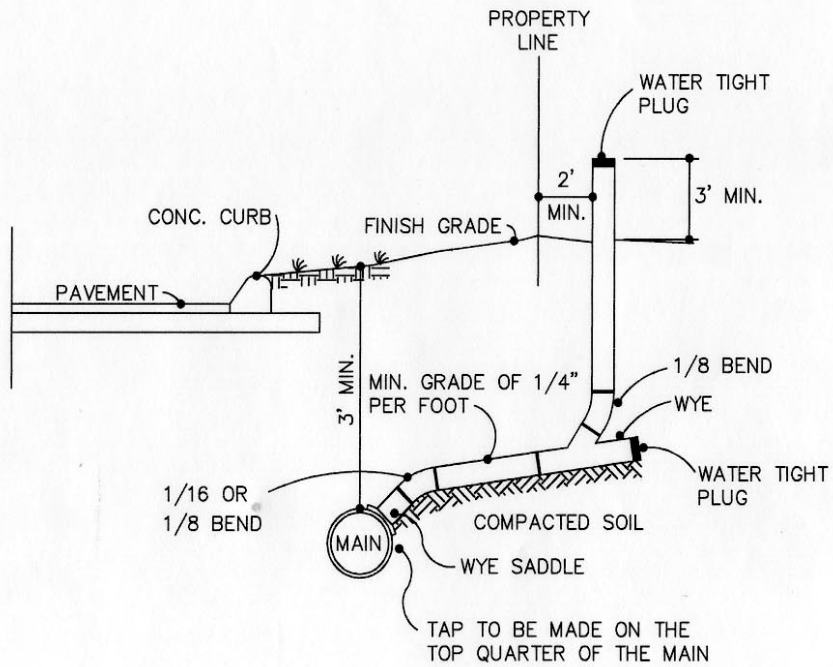

NOTE: MINIMUM SDR 35 PIPE FOR SANITARY SEWER SERVICES TO 14' DEPTH. SANITARY SEWER SERVICES WHICH ARE OVER 14' DEEP SHALL REQUIRE WATER LINE QUALITY PIPE.

NO.	DATE	DESCRIPTION	BY
1.	12/4/00	EFFECTIVE DATE	COB

STANDARD SANITARY SEWER TAP AND SERVICE

STANDARD DETAIL 7.08

MINIMUM TEST TIMES AND ALLOWABLE AIR LOSS VALUES FOR VARIOUS PIPE SIZES PER 100 FEET OF PIPE

PIPE DIAMETER INCHES	TIME, T (SEC/100 FT)	ALLOWABLE AIR LOSS, Q (FT3/MIN)
6	42	2.0
8	72	2.0
10	90	2.5
12	108	3.0
15	126	4.0
18	144	5.0
21	180	5.5
24	216	6.0
27	252	6.5
30	288	7.0

NO.	DATE	DESCRIPTION	BY
1.	12/4/00	EFFECTIVE DATE	CCB

STANDARD AIR TEST TABLE

STANDARD DETAIL 7.09

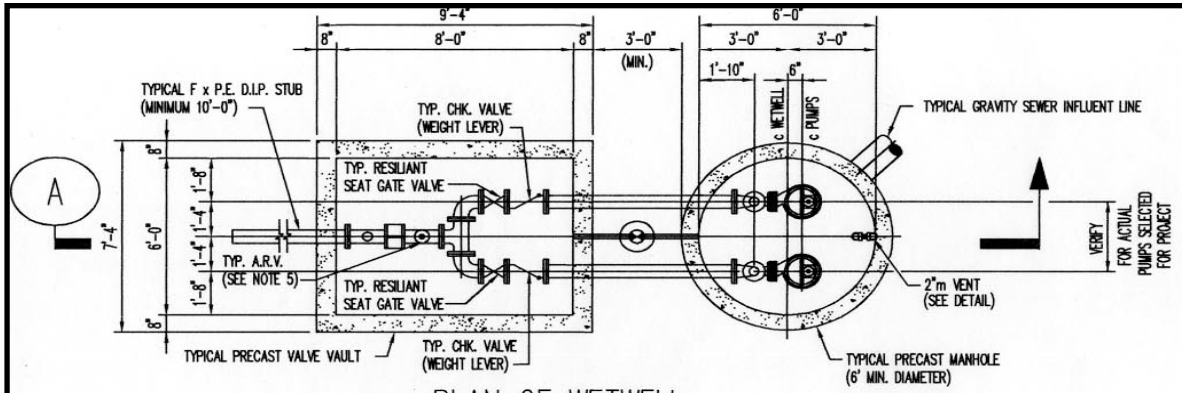

PLAN OF WETWELL

NO SCALE

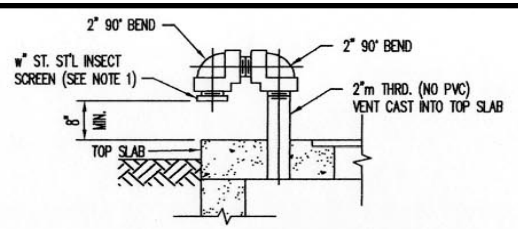

VENT NOTES:
1. INSTALL w" INSECT SCREEN OVER A SHORT NIPPLE WITH ONE ST. ST'L BAND CLAMP.
2. MATERIAL ABOVE EMBEDDED STUB TO BE PAINTED SCH. 80 PVC OR GALVANIZED DRAIN PIPE.

TYPICAL VENT DETAIL

NO SCALE

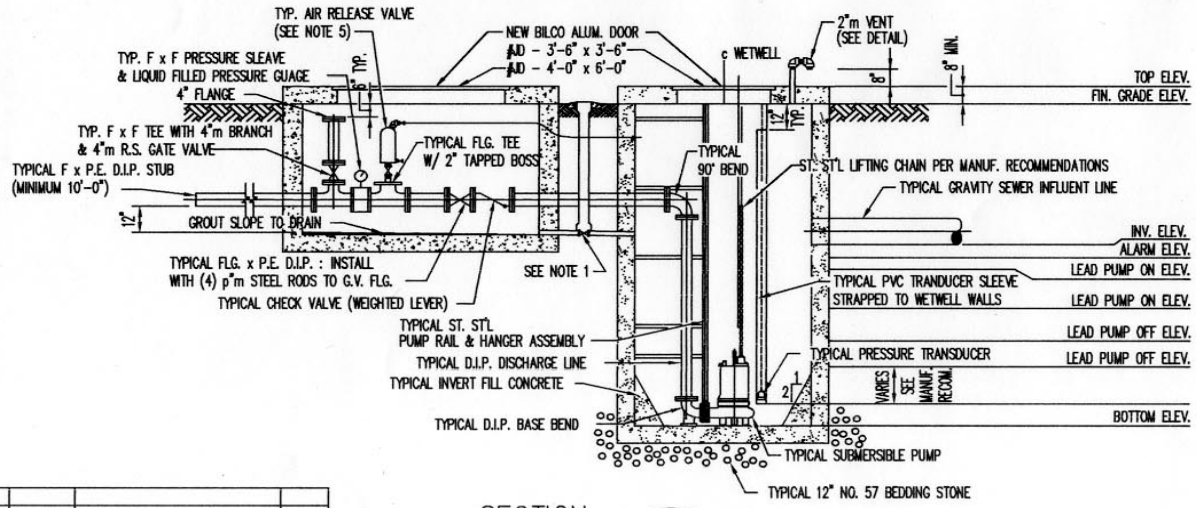

SECTION A

NO SCALE

NOTES:
1. INSTALL 2"m PVC DRAIN BETWEEN WETWELL AND VALVE VAULT WITH 2" BRASS VALVE & C.I. VALVE BOX. SLOPE DRAIN r" PER FOOT.
2. VERIFY PIPE PENETRATIONS AND ALL OTHER DIMENSIONS WITH PUMP MANUFACTURER.
3. PIPING TO INCLUDE A.R.V.'S AND PRESSURE GUAGES (WITH DIMENSIONS IN FEET OF HEAD) FOR EACH PUMP.
4. PRESSURE GUAGE & PRESSURE SLEEVE TO BE OIL FILLED ASSEMBLY BY "RED VALVE".
5. A.R.V. TO BE 2" APCO MODEL 400S ARV & 2" ISOLATION VALVE, FULL ACCESSORY PACKAGE. PIPE AIR & BLOW-OFF DISCHARGE TO WETWELL.
6. ELECTRICAL CONTROL PANEL LOCATION TO BE DETERMINED BY THE OWNER.
7. ALL MOUNTING HARDWARE TO BE STAINLESS STEEL, NO EXCEPTIONS.
8. THE DEVELOPER OR THEIR CONTRACTOR SHALL CONTACT THE CITY OF OAK RIDGE ELECTRIC DEPARTMENT TO DETERMINE THE SERVICE REQUIREMENTS FOR THE PUMP STATION.

NO.	DATE	DESCRIPTION	BY
1.	12/4/00	EFFECTIVE DATE	CCB

TYPICAL SUBMERSIBLE PUMP STATION

STANDARD DETAIL

7.10

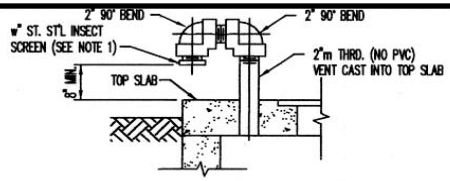

VENT NOTES:
1. INSTALL w" INSECT SCREEN OVER A SHORT NIPPLE WITH ONE ST. ST'L BAND CLAMP.
2. MATERIAL ABOVE EMBEDDED STUB TO BE PAINTED SCH. 80 PVC OR GALVANIZED DRAIN PIPE.

TYPICAL VENT DETAIL

NO SCALE

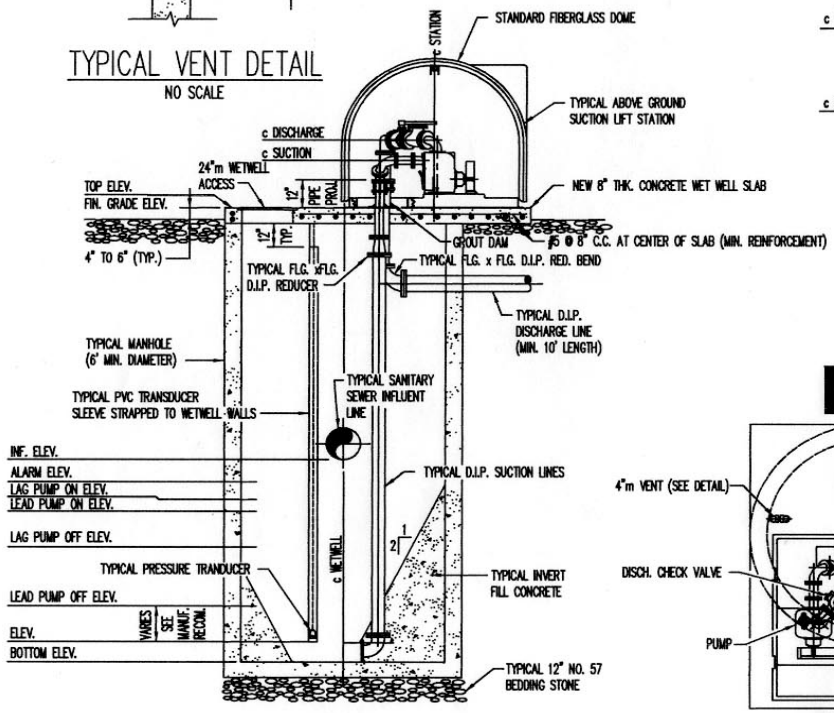

SECTION B

NO SCALE

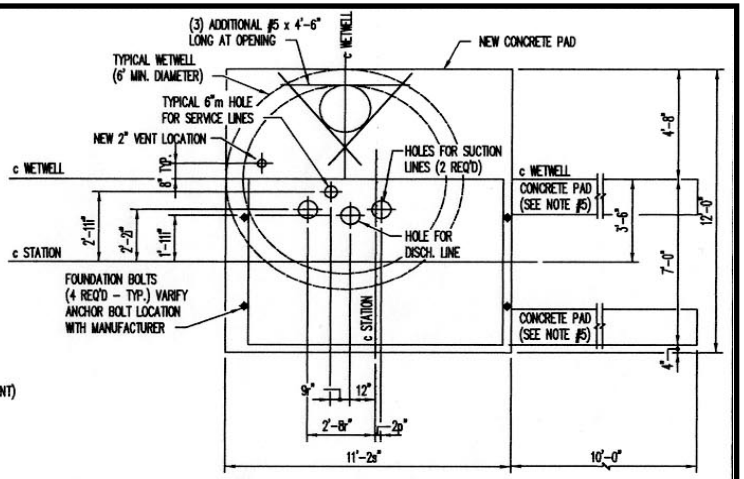

PIPE PENETRATION PLAN

NO SCALE

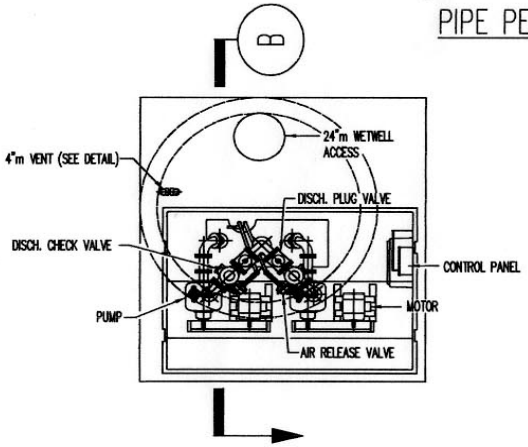

TYPICAL LIFT STATION PLAN

NO SCALE

NOTES:
1. VERIFY PIPE PENETRATIONS AND ALL OTHER DIMENSIONS WITH PUMP STATION MANUFACTURER.
2. PIPING TO INCLUDE A.R.V.'S AND PRESSURE GUAGES (WITH DIMENSIONS IN FEET OF HEAD) FOR EACH PUMP.
3. PRESSURE GUAGE TO BE OIL FILLED AND MOUNTED ON RED-VALVE PRESSURE SLEEVE.
4. A.R.V. TO BE 2" APCO MODEL 400 WITH FULL ACCESSORY PACKAGE. PIPE AIR AND BLOW-OFF DISCHARGE TO WETWELL.
5. NEW 8" THK. CONCRETE PADS (2 REQ'D). 18" WIDE x 10'-0" LONG WITH #5 AT 8"CC AT CENTER OF PAD. ALIGN TO ALLOW DOME TO ROLL AT LEVEL GRADE.
6. ALL MOUNTING HARDWARE TO BE STAINLESS STEEL. NO EXCEPTIONS.
7. THE DEVELOPER OR THEIR CONTRACTOR SHALL CONTACT THE CITY OF OAK RIDGE ELECTRIC DEPARTMENT TO DETERMINE THE SERVICE REQUIREMENTS FOR THE PUMP STATION.

NO.	DATE	DESCRIPTION	BY
1.	12/4/00	EFFECTIVE DATE	CCB

TYPICAL ABOVE GROUND PUMP STATION

STANDARD DETAIL 7.11

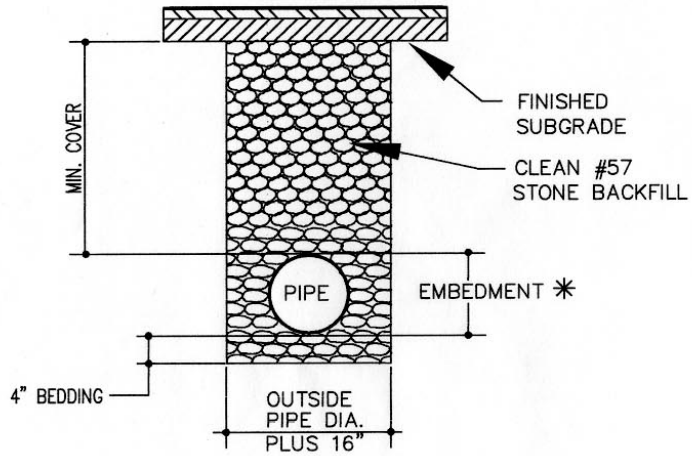

PAVEMENT AREA

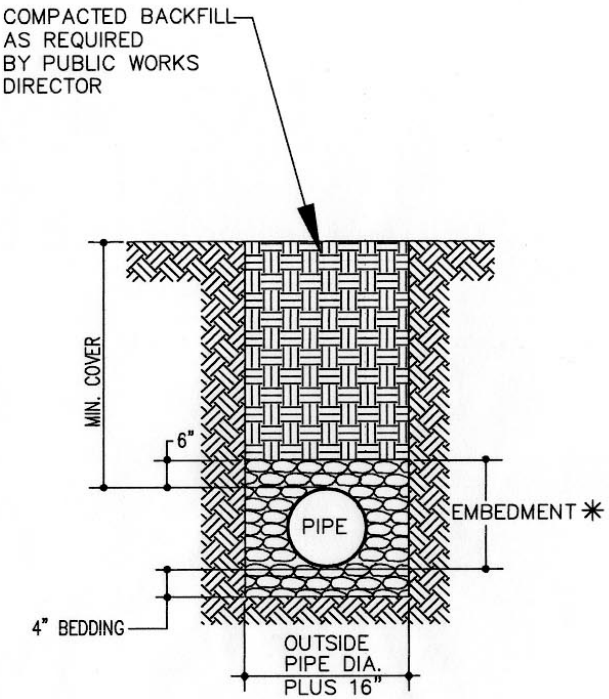

UNPAVED AREA

NOTE TO CONTRACTOR:

ALL PAVEMENT CUTS SHALL BE REPAIRED WITHIN A MAXIMUM OF THREE (3) DAYS FROM THE DATE THE CUT IS MADE. IF CONDITIONS DO NOT PERMIT A PERMANENT REPAIR WITHIN THE GIVEN TIME LIMIT, PERMISSION TO MAKE A TEMPORARY REPAIR MUST BE OBTAINED FROM THE DIRECTOR OF PUBLIC WORKS.

✳ *FOR ACCEPTABLE CLASSES OF EMBEDMENT MATERIALS, SEE SECTION 7.01 F (1 AND 6)*

✳✳ *ALL PIPE LINES WITHIN 3 FEET OF BACK OF CURB SHALL BE BACKFILLED ABOVE EMBEDMENT MATERIAL TO WITHIN ONE FOOT OF FINISHED GROUND ELEVATION WITH #57 STONE.*

NO.	DATE	DESCRIPTION	BY
1.	12/4/00	EFFECTIVE DATE	CCB

NEW CONSTRUCTION PIPE BEDDING DETAILS

STANDARD DETAIL

7.12

NUMBER 9-86-11

RESOLUTION

A RESOLUTION APPROVING THE CITY'S MANAGEMENT-OPERATIONS-MAINTENANCE PROGRAM AS REQUIRED FOR COMPLIANCE WITH THE U.S. ENVIRONMENTAL PROTECTION AGENCY (EPA) ADMINISTRATIVE ORDER.

WHEREAS, at the September 27, 2010 work session, City Council was briefed by the City Manager and Public Works Director on an Administrative Order with the United States Environmental Protection Agency (EPA) outlining the various studies, plans, and corrective actions to be taken by the City related to the violations determined by the EPA regarding periodic overflows from the sanitary sewer collection system; and

WHEREAS, as part of the Administrative Order, the City is required to develop a Management-Operations-Maintenance (MOM) Program for the wastewater collection and transportation system, which must be approved by City Council prior to submission to the EPA; and

WHEREAS, the purpose of the MOM program is for the City to completely re-evaluate the wastewater collection and transportation system, organizational structure, and manpower needs, and to establish a financial plan to upgrade the system for compliance with the requirements of the Administrative Order; and

WHEREAS, City Staff, in conjunction with Lamar Dunn & Associates, Inc., developed the MOM program, which program the City Manager recommends by approved.

NOW, THEREFORE, BE IT RESOLVED BY THE COUNCIL OF THE CITY OF OAK RIDGE, TENNESSEE:

That the recommendation of the City Manager is approved and the attached Management-Operations-Maintenance Program is hereby approved by City Council for submittal to the U.S. Environmental Protection Agency.

This the 12th day of September 2011.

APPROVED AS TO FORM AND LEGALITY:

Kenneth R. Krushenski, City Attorney

Thomas L. Beehan, Mayor

Diana R. Stanley, Acting City Clerk

NUMBER 7-66-11

RESOLUTION

A RESOLUTION TO AMEND RESOLUTION 10-103-10, WHICH AUTHORIZED A PROFESSIONAL SERVICES AGREEMENT WITH LAMAR DUNN & ASSOCIATES, INC., KNOXVILLE, TENNESSEE, FOR ASSISTANCE WITH VARIOUS TASKS REQUIRED FOR COMPLIANCE WITH THE U.S. ENVIRONMENTAL PROTECTION AGENCY (EPA) ADMINISTRATIVE ORDER, IN ORDER TO INCREASE THE SCOPE OF WORK FOR ADDITIONAL NEEDED SERVICES; SAID AMENDMENT IN THE ESTIMATED AMOUNT OF $2,400,750.00.

WHEREAS, at the September 27, 2010 work session, City Council was briefed by the City Manager and Public Works Director on an Administrative Order with the United States Environmental Protection Agency (EPA) outlining the various studies, plans, and corrective actions to be taken by the City related to the violations determined by the EPA regarding periodic overflows from the sanitary sewer collection system; and

WHEREAS, by Resolution 10-103-10, City Council awarded a professional services agreement with Lamar Dunn & Associates, Inc., Knoxville, Tennessee, for assistance with various tasks required by the Administrative Order to improve the wastewater collection system, in the estimated amount of $1,429,620.00; and

WHEREAS, due to the enormity of the task, City Staff has a need for additional professional engineering services from Lamar Dunn & Associates, Inc., to provide program management, GIS services, project oversight, bidding services, contract administration, and resident project representation related to compliance with the Administrative Order; and

WHEREAS, the City Manager recommends approval of an amendment to the professional services agreement for said additional services.

NOW, THEREFORE, BE IT RESOLVED BY THE COUNCIL OF THE CITY OF OAK RIDGE, TENNESSEE:

That the recommendation of the City Manager is approved and Resolution 10-103-10 is hereby amended to increase the scope of work for the professional services agreements with Lamar Dunn & Associates, Inc., 3305 Maloney Road, Knoxville, Tennessee 37920, to provide for additional services to provide program management, GIS services, project oversight, bidding services, contract administration, and resident project representation related to compliance with the United States Environmental Protection Agency (EPA) Administrative Order; said amendment in the estimated amount of $2,400,750.00.

BE IT FURTHER RESOLVED that the Mayor is hereby authorized to execute the appropriate legal instruments to accomplish the same.

This the 11th day of July 2011.

APPROVED AS TO FORM AND LEGALITY:

Kenneth R. Krushenski, City Attorney

Thomas L. Beehan, Mayor

Donna L. Patterson, City Clerk

NUMBER 7-67-11

RESOLUTION

A RESOLUTION AUTHORIZING PROFESSIONAL SERVICES AGREEMENTS WITH BARGE, WAGGONER, SUMNER & CANNON, INC.; CANNON & CANNON, INC.; FULGHUM, MACINDOE & ASSOCIATES, INC.; JACOBS ENGINEERING GROUP, INC.; AND MCGILL ASSOCIATES, P.A.; ALL OF KNOXVILLE, TENNESSEE, FOR ENGINEERING SERVICES PERTAINING TO SEWER REMEDIATION PROJECTS AS REQUIRED FOR COMPLIANCE WITH THE U.S. ENVIRONMENTAL PROTECTION AGENCY (EPA) ADMINISTRATIVE ORDER, IN THE COLLECTIVE ESTIMATED AMOUNT OF $1,000,000.00.

WHEREAS, at the September 27, 2010 work session, City Council was briefed by the City Manager and Public Works Director on an Administrative Order with the United States Environmental Protection Agency (EPA) outlining the various studies, plans, and corrective actions to be taken by the City related to the violations determined by the EPA regarding periodic overflows from the sanitary sewer collection system; and

WHEREAS, as part of the Administrative Order, the City is required to have a wastewater collection and transportation system remediation plan that provides details of repairing the sewer system, which plan will require the services of several firms to design projects and assist in construction oversight; and

WHEREAS, in February 2011, the City issued a request for statement of interest and qualifications for professional engineering firms for said services; and

WHEREAS, based upon their qualifications, City Staff selected the following engineering firms: Barge, Waggoner, Sumner & Cannon, Inc.; Cannon & Cannon, Inc.; Fulghum, MacIndoe & Associates, Inc.; Jacobs Engineering Group, Inc.; and McGill Associates, P.A.; and

WHEREAS, the City Manager recommends approval of professional services agreements with all five (5) firms for said services.

NOW, THEREFORE, BE IT RESOLVED BY THE COUNCIL OF THE CITY OF OAK RIDGE, TENNESSEE:

That the recommendation of the City Manager is approved and the City is hereby authorized to enter into phase one of the professional services agreements for services associated with the wastewater collection and transportation system remediation plan as required by the United States Environmental Protection Agency Administrative Order, in the collective estimated amount of $1,000,000.00, with the following firms: Barge, Waggoner, Sumner & Cannon, Inc., 10133 Sherrill Boulevard, Suite 200, Knoxville, Tennessee 37932; Cannon & Cannon, Inc.; 8550 Kingston Pike, Knoxville, Tennessee 37919; Fulghum, MacIndoe & Associates, Inc.; 10330 Hardin Valley Road #201, Knoxville, Tennessee 37932-3742; Jacobs Engineering Group, Inc.; 9721 Cogdill Road, Suite 201, Knoxville, Tennessee 37932; and McGill Associates, P.A., 118 Mabry Hood Road, Suite 400, Knoxville, Tennessee 37922.

BE IT FURTHER RESOLVED that the Mayor is hereby authorized to execute the appropriate legal instruments to accomplish the same.

This the 11th day of July 2011.

APPROVED AS TO FORM AND LEGALITY:

Kenneth R. Krushenski, City Attorney

Thomas L. Beehan, Mayor

Donna L. Patterson, City Clerk

NUMBER 10-103-10

RESOLUTION

WHEREAS, the City has a need for professional engineering services to assist the City with various tasks required by order of the United States Environmental Protection Agency (EPA) to improve the wastewater collection system; and

WHEREAS, Lamar Dunn & Associates, Inc., Knoxville, Tennessee, has been the City's consultant on prior utility projects and is familiar with the City's needs; and

WHEREAS, Lamar Dunn & Associates, Inc., has been requested by the City to assist the City in its efforts to comply with the EPA order; and

WHEREAS, the City Manager recommends approval of an agreement between the parties for said services.

NOW, THEREFORE, BE IT RESOLVED BY THE COUNCIL OF THE CITY OF OAK RIDGE, TENNESSEE:

That the recommendation of the City Manager is approved and the City is hereby authorized to enter into an agreement with Lamar Dunn & Associates, Inc., 3305 Maloney Road, Knoxville, Tennessee 37920, for the provision of professional engineering services to assist the City with various tasks required by the United States Environmental Protection Agency (EPA) to improve the wastewater collection system to comply with the Administrative Order by the EPA, in the estimated amount of $1,429,620.00.

BE IT FURTHER RESOLVED that the Mayor is hereby authorized to execute the appropriate legal instruments to accomplish the same.

This the 12th day of October 2010.

APPROVED AS TO FORM AND LEGALITY:

City Attorney

Mayor Pro Tem

City Clerk

NUMBER 5-36-11

RESOLUTION

A RESOLUTION AUTHORIZING THE PURCHASE OF AN INFORMATION MANAGEMENT SYSTEM FROM INFOR GLOBAL SOLUTIONS (MICHIGAN), INC., ALPHARETTA, GEORGIA, IN THE ESTIMATED AMOUNT OF $272,100.00.

WHEREAS, at the September 27, 2010 work session, City Council was briefed by the City Manager and Public Works Director on an Administrative Order with the United States Environmental Protection Agency (EPA Order) outlining the various studies, plans, and corrective actions to be taken by the City related to the violations determined by the EPA regarding periodic overflows from the sanitary sewer collection system; and

WHEREAS, the EPA Order requires the City to implement an Information Management System (IMS); and

WHEREAS, Section D, Item i, of the EPA Order requires the City to develop the IMS program and submit it for the EPA's review, comment and approval by June 28, 2011; and

WHEREAS, the City issued a Request for Proposals for the IMS program, with Infor Global Solutions (Michigan) Inc., Alpharetta, Georgia, submitting the most responsive proposal based upon the City's needs; and

WHEREAS, the City Manager recommends acceptance of the proposal by Infor Global Solutions (Michigan) Inc.

NOW, THEREFORE, BE IT RESOLVED BY THE COUNCIL OF THE CITY OF OAK RIDGE, TENNESSEE:

That the recommendation of the City Manager is approved and the City is hereby authorized to purchase an Information Management System (IMS) from Infor Global Solutions (Michigan), Inc., 13560 Morris Road, Suite 4100, Alpharetta, GA 30004, for compliance with the Administrative Order from the United States Environmental Protection Agency (EPA), in the estimated amount of $272,100.00.

BE IT FURTHER RESOLVED that the Mayor is hereby authorized to execute the appropriate legal instruments to accomplish the same.

This the 9th day of May 2011.

APPROVED AS TO FORM AND LEGALITY:

Kenneth R. Krushenski, City Attorney

Thomas L. Beehan, Mayor

Donna L. Patterson, City Clerk

NUMBER 2-12-99

RESOLUTION

WHEREAS, in September of 1997, City Council approved a pilot program for the reimbursement of costs associated with the replacement of sanitary sewer laterals; and

WHEREAS, the City desires to formally establish a Sewer Lateral Reimbursement and Assistance Policy wherein the City will reimburse a homeowner the cost associated with the replacement of that portion of a sanitary sewer lateral that lies beyond the boundary of the property being served and wherein a licensed plumbing contractor may obtain assistance from the City in replacing laterals to ensure prompt restoration of sewer service, which policy the City Manager recommends be approved.

NOW, THEREFORE, BE IT RESOLVED BY THE MAYOR AND COUNCILMEN OF THE CITY OF OAK RIDGE, TENNESSEE:

That the recommendation of the City Manager is accepted and the attached Lateral Reimbursement and Assistance Policy is hereby approved.

This the 1st day of February 1999.

APPROVED AS TO FORM AND LEGALITY:

City Attorney

Mayor

City Clerk

City of Oak Ridge
Lateral Reimbursement and Assistance Policy

Policy Statement: City Code Section 25-34.14 provides that ownership and maintenance responsibility for sanitary sewer laterals rests solely with the owner of the building being served up to its point of connection to the City sewer system. Often this involves crossing through City rights-of-way, under city streets, and across private property of adjoining neighbors. In the event of a breakdown of a lateral, considerable expense can be realized by the property owner in having a private Licensed Plumbing Contractor perform difficult work replacing the line, often in streets or in deep excavations the Licensed Plumbing Contractor may not be comfortable with.

It is the intent of this policy to help defray some of the extraordinary costs borne by the property owner and to provide for a mechanism whereby Licensed Plumbing Contractors may obtain assistance from the City in replacing laterals to ensure prompt restoration of sewer service to the property.

Procedures:

Reimbursement

1. Whenever a Licensed Plumbing Contractor identifies and the City Plumbing Inspector agrees that a sewer lateral is in need of replacement, the lateral shall be replaced in accordance with The Plumbing Code of the City of Oak Ridge.
2. The cost associated with that portion of the lateral that lies beyond the boundary of the property being served shall be eligible for reimbursement under this policy.
   a. The maximum reimbursement for work in unpaved areas shall be $25 per linear foot.
   b. The maximum reimbursement for work in paved areas shall be a flat fee of $1,800 for the first six feet of line and $55 per linear foot thereafter.
3. The Licensed Plumbing Contractor who performs the work shall submit the bill for the work to the property owner who contracted for the work. The property owner shall be responsible for paying the bill.
4. The property owner shall complete Form No. 05-06-37, Sewer Lateral Reimbursement, and shall submit evidence that the plumbing bill has been paid to the City Plumbing Inspector who shall verify and approve the charges.
5. The City Plumbing Inspector shall forward Form 05-06-37 to the Finance Department for reimbursement to the property owner of the allowable charges.

City Assistance

1. In the event the work to be performed is of such a nature that the Licensed Plumbing Contractor engaged by the property owner feels uncomfortable in attempting the work from a health or safety perspective, e.g., depth of excavation, traffic control, etc., the Licensed Plumbing Contractor may request assistance from the City in completing the work.
   a. The Licensed Plumbing Contractor may request such assistance by completing Form No. 05-06-35 and submitting it to the City Plumbing Inspector.
   b. The City Plumbing Inspector shall, by approving such request, become the responsible party for coordinating the requested work.
2. The Public Works Department shall assume responsibility for performing the requested work in a timely manner. The work performed shall be inspected by the City Plumbing Inspector.
3. Any work performed by the City shall not be eligible for reimbursement under this policy. All work performed by the City under this policy shall be at no cost to the Licensed Plumbing Contractor or the property owner.